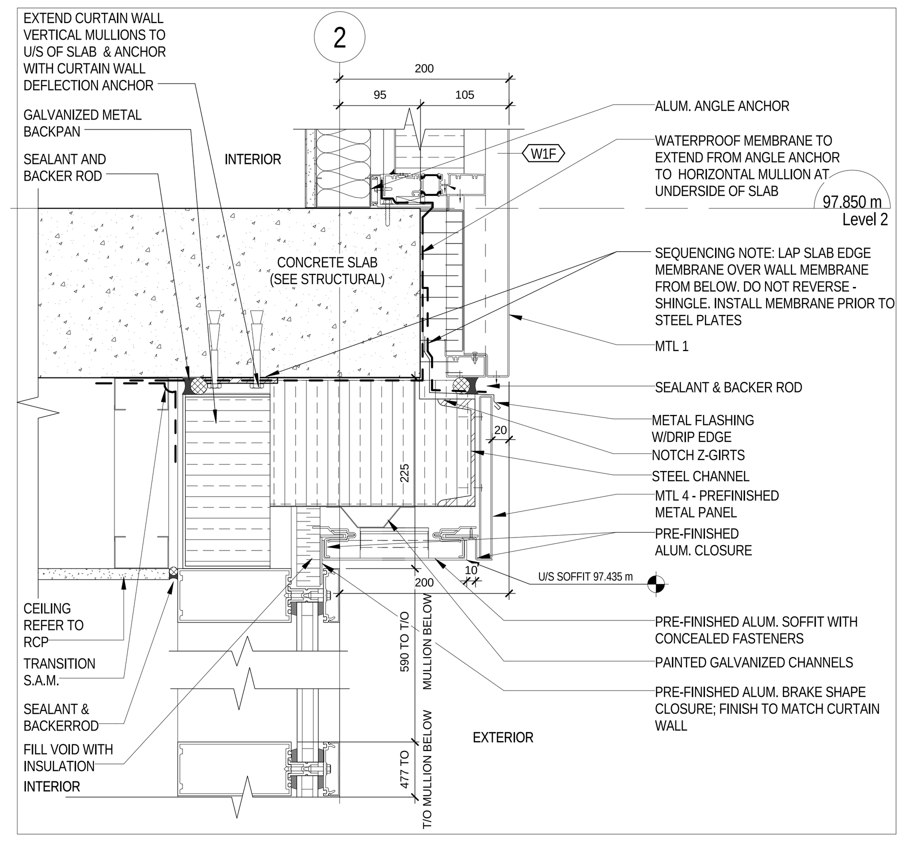

16 SOFFIT CONDITION 2 AT RESIDENTIAL LOBBY EAST
1 /A 206 1 : 5

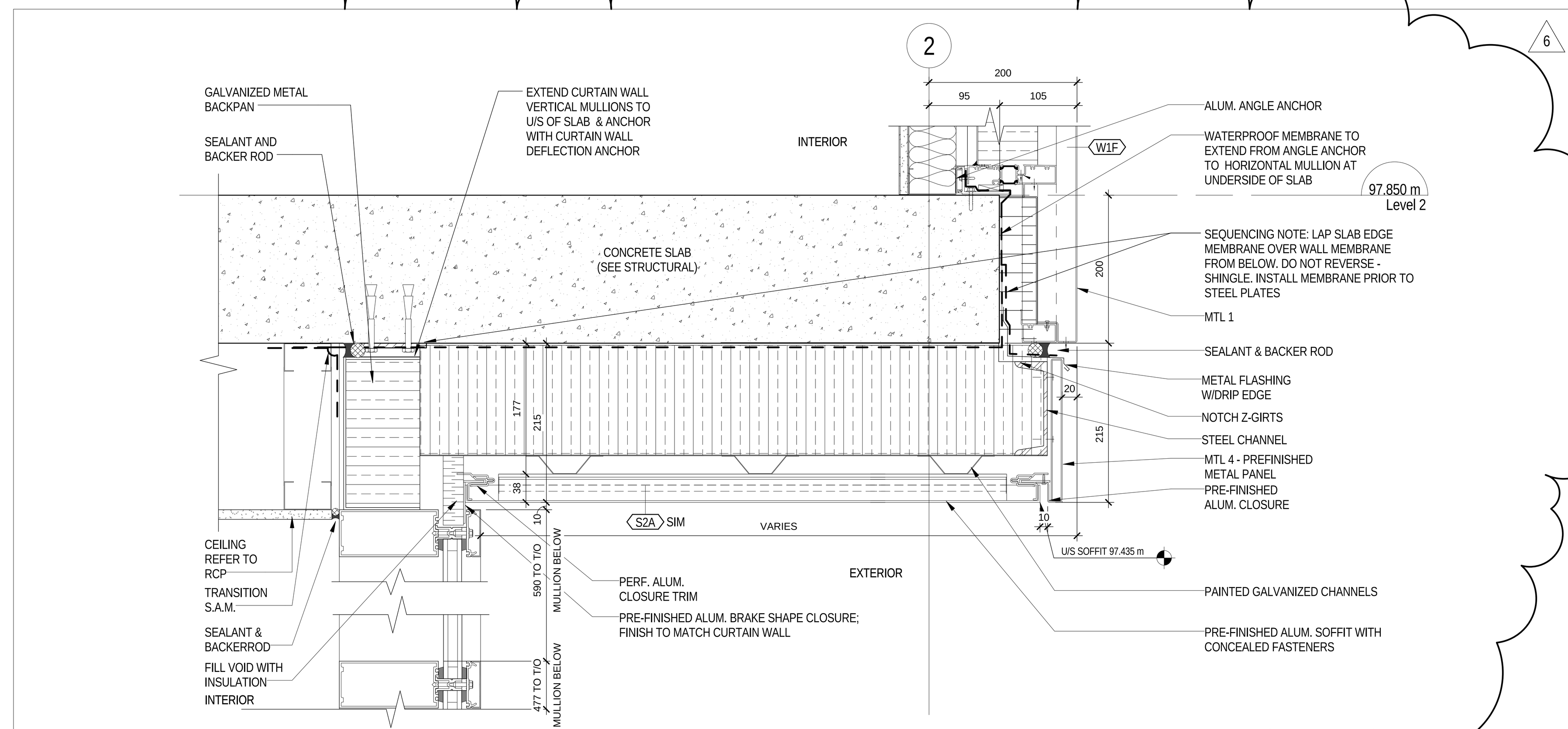

15 SOFFIT CONDITION 1 AT RESIDENTIAL LOBBY EAST
1 /A 206 1 : 5

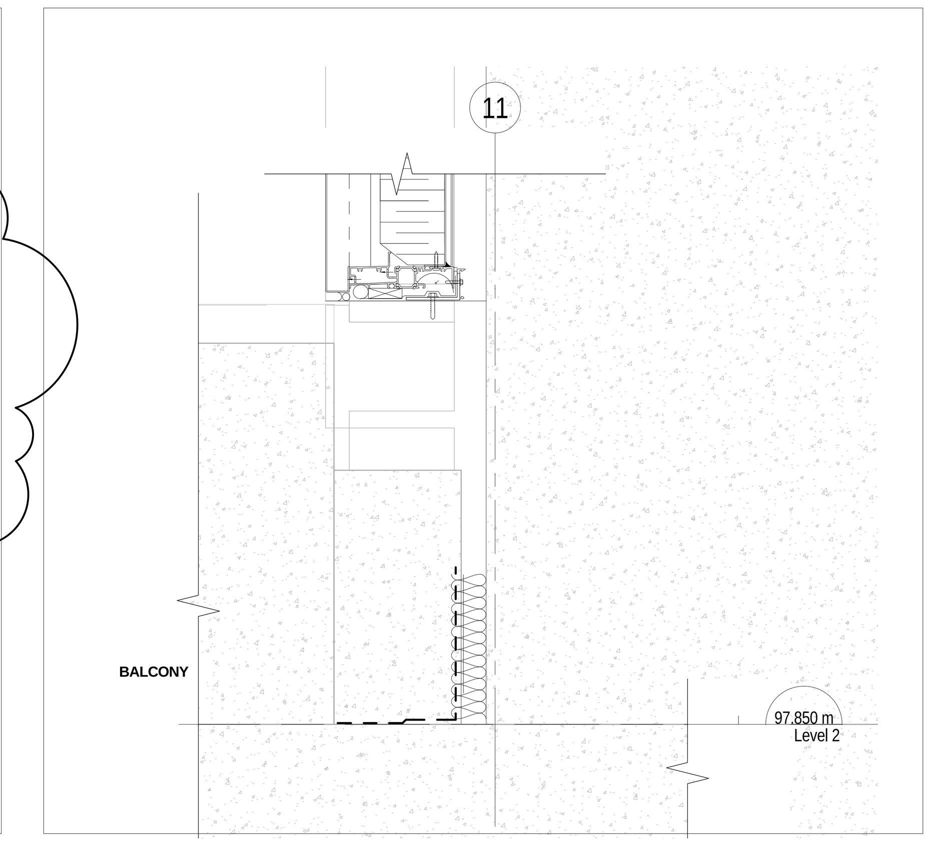

13 TYPICAL TERRACE PARAPET TO BUILDING CORNER
7 /A 603 1 : 5

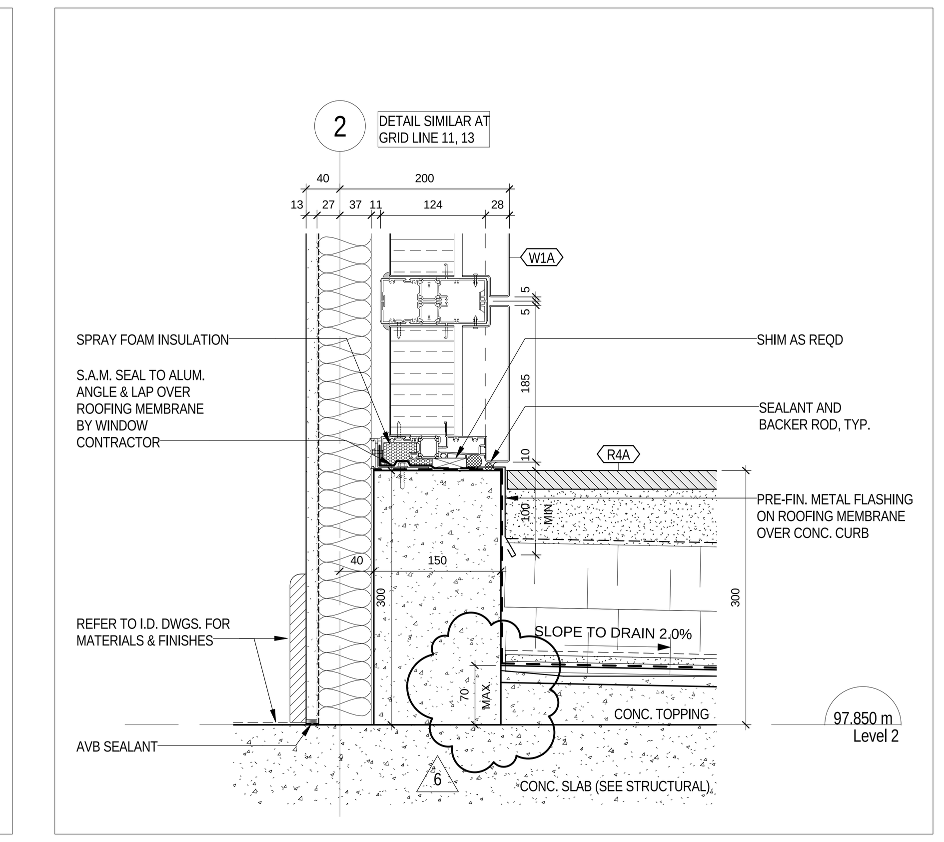

12 TYPICAL WINDOW WALL AT 2F TERRACE CONC. CURB
1 /A 502 1 : 5

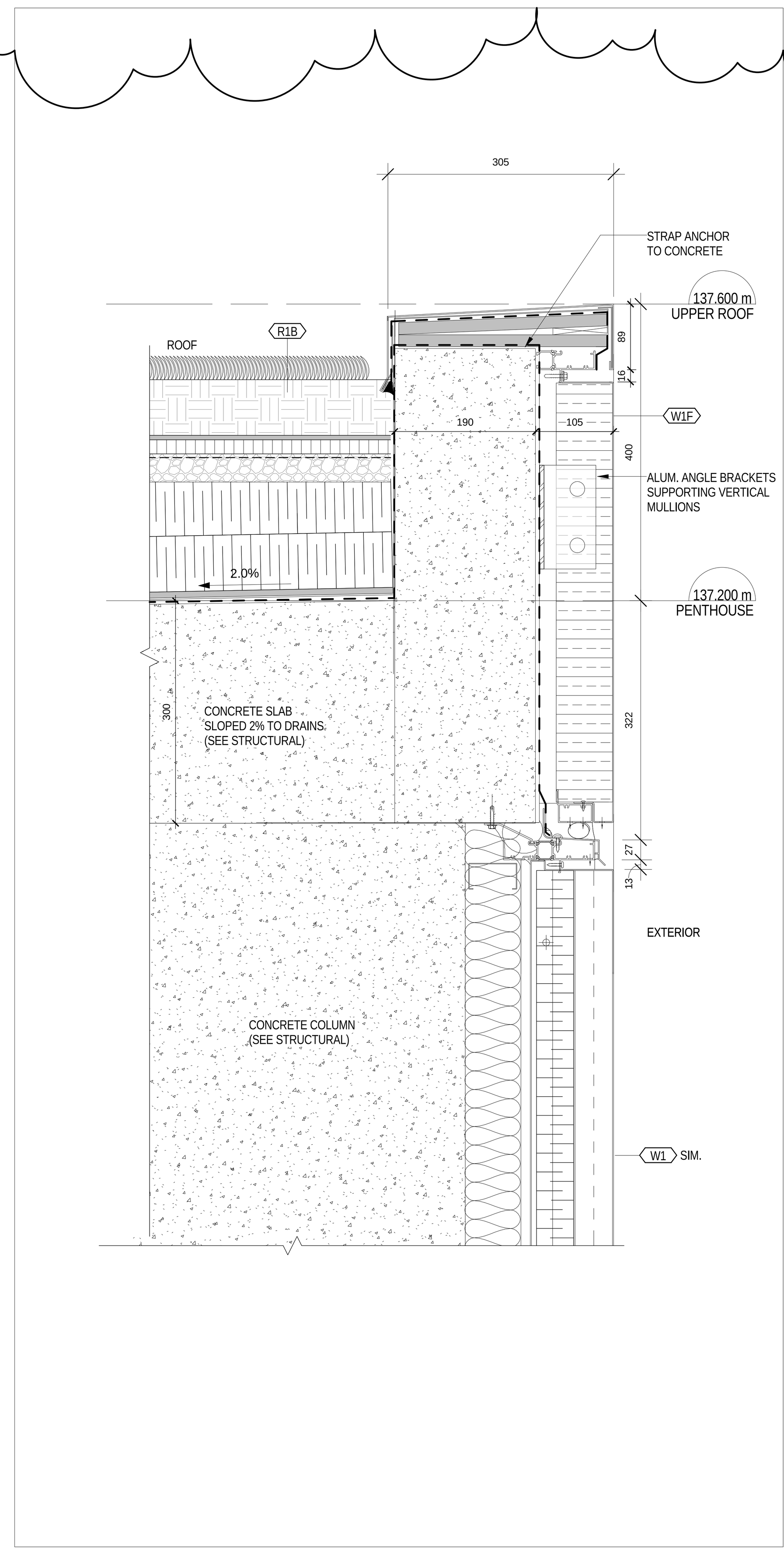

11 PARAPET AT GREEN ROOF
1 /A 501 1 : 5

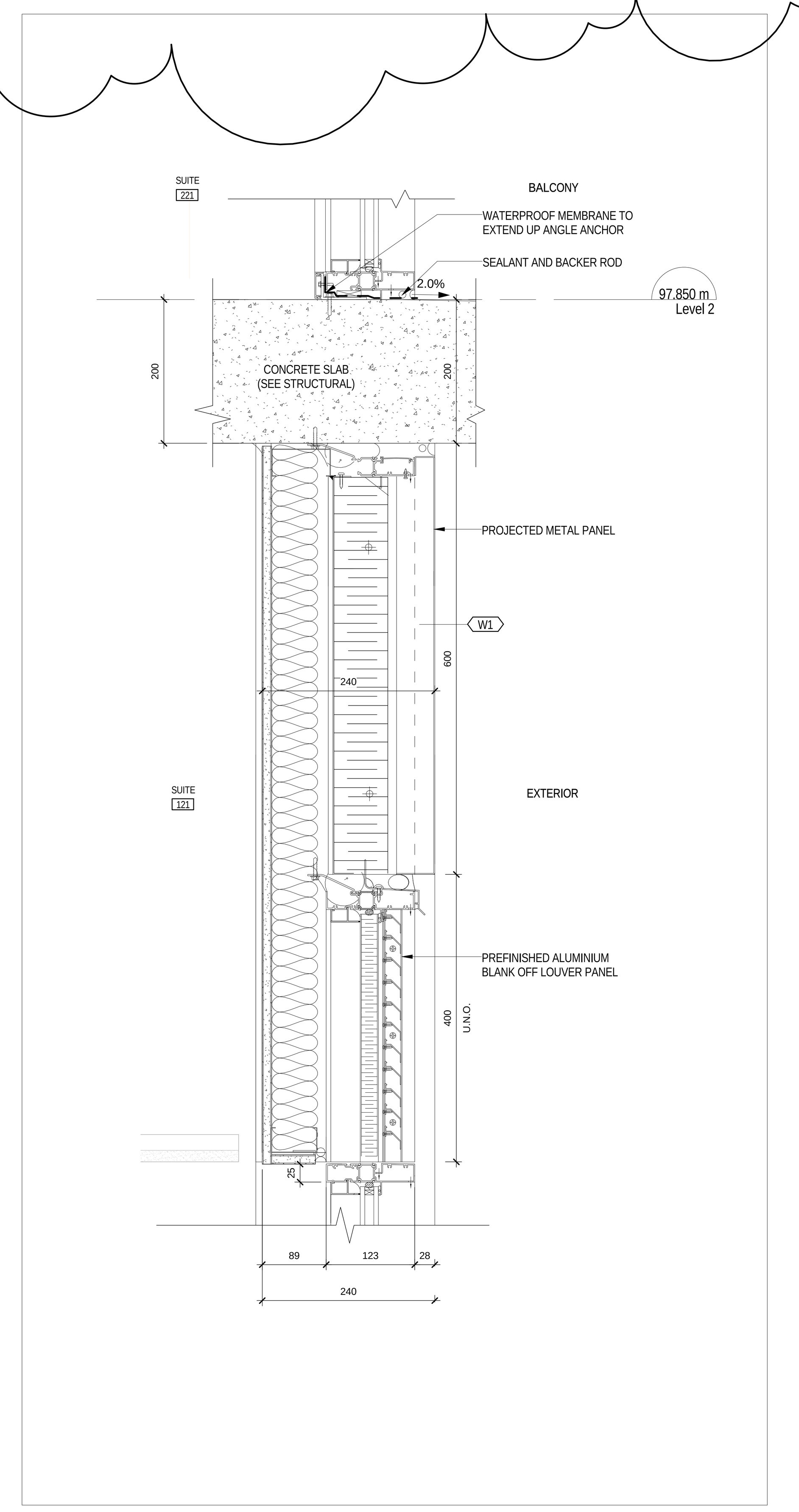

10 TYPICAL BLANK OFF LOUVER
6 /A 505 1 : 5

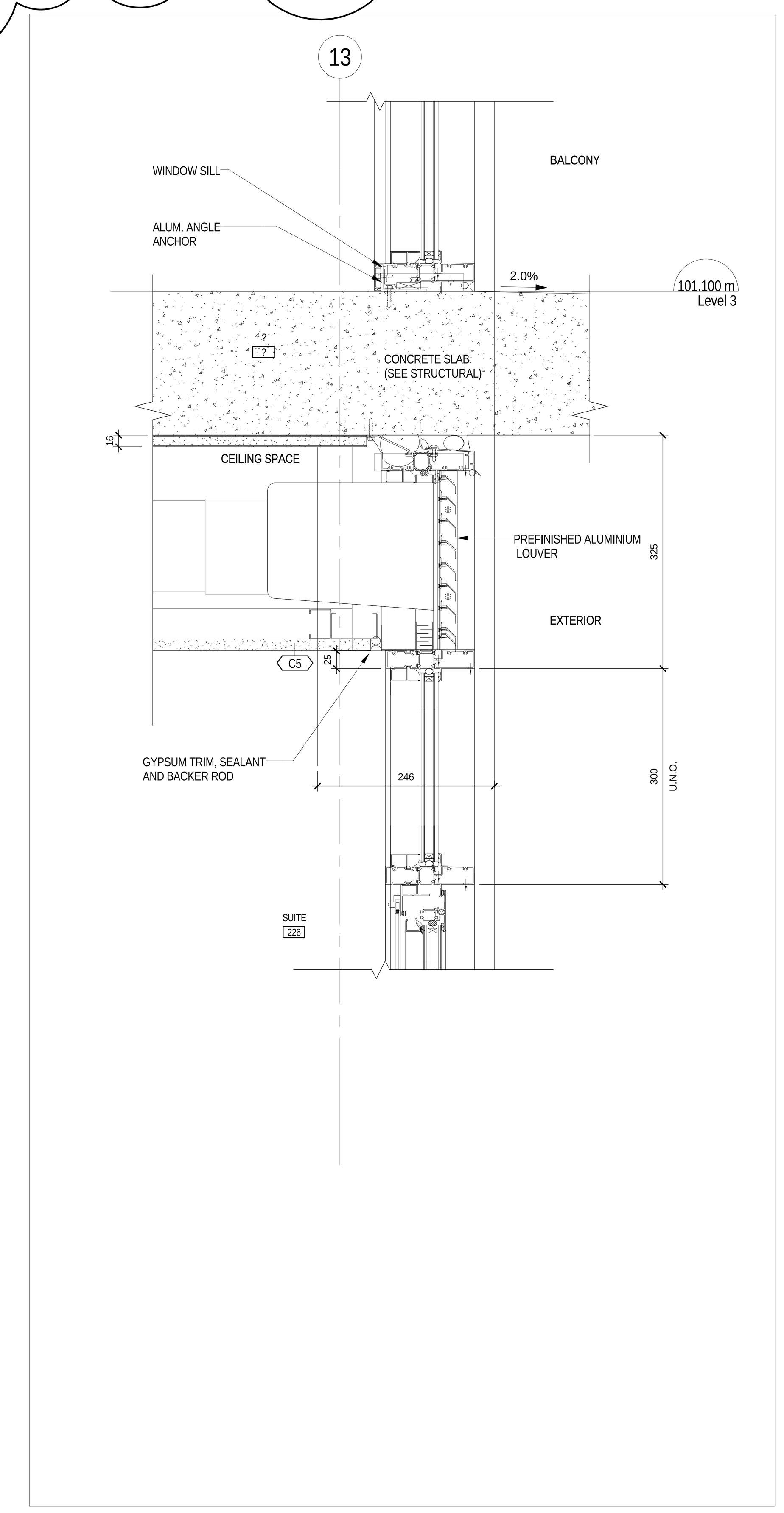

8 TYPICAL ACTIVE LOUVER
2 /A 501 1 : 5

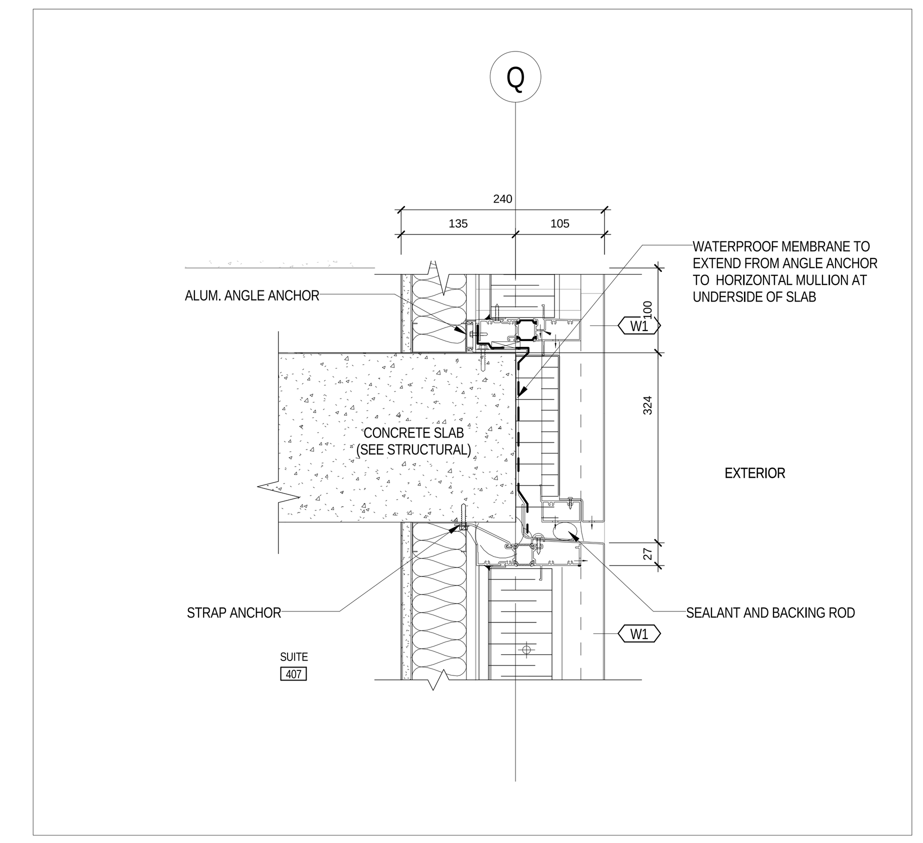

6 TYPICAL BYPASS - METAL PANEL TO METAL PANEL
3 /A 503 1 : 5

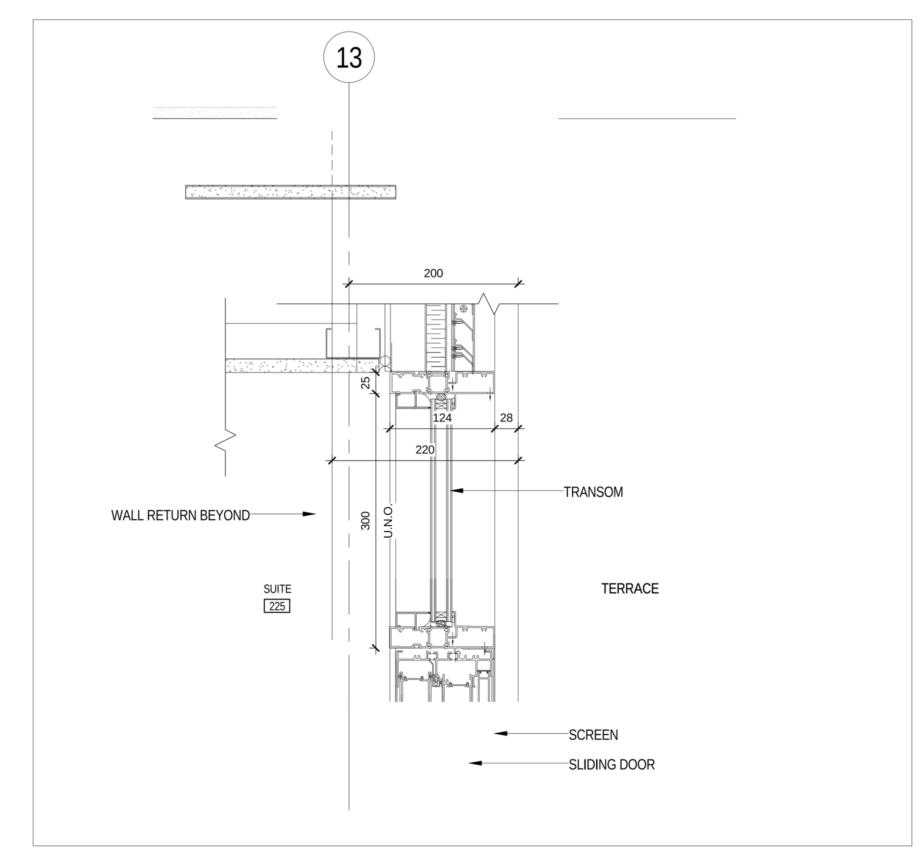

5 TYPICAL SLIDING DOOR HEAD
8 /A 505 1 : 5

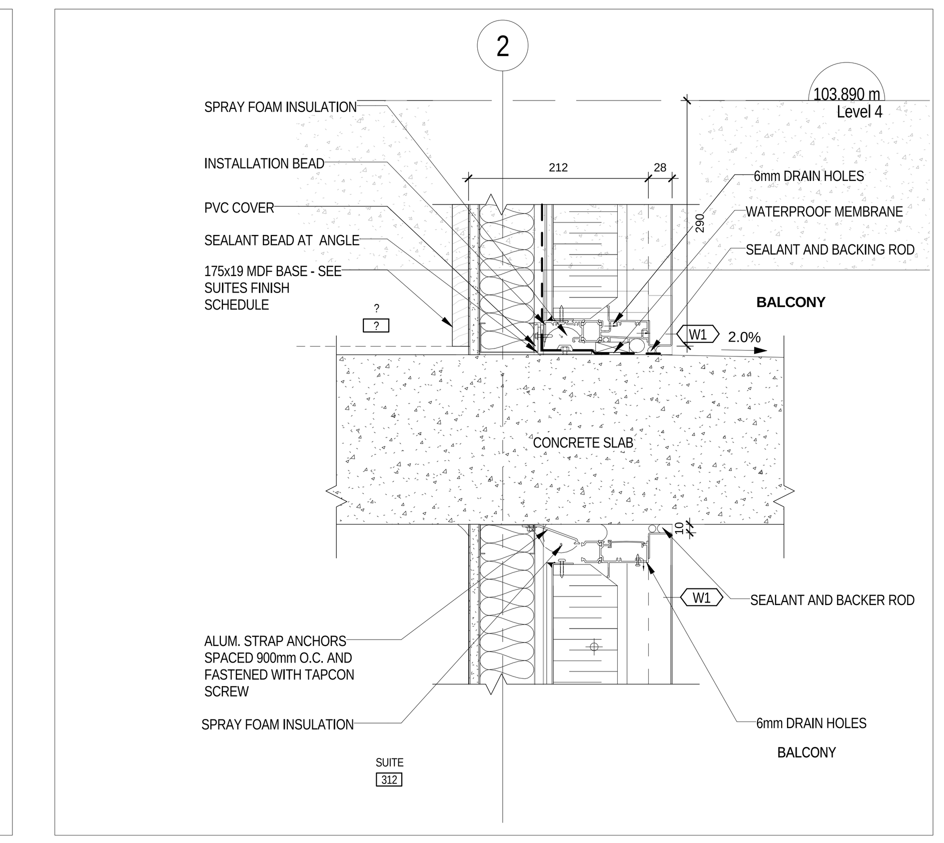

3 TYPICAL PROJECTED PANEL AT STRUCTURE
3 /A 502 1 : 5

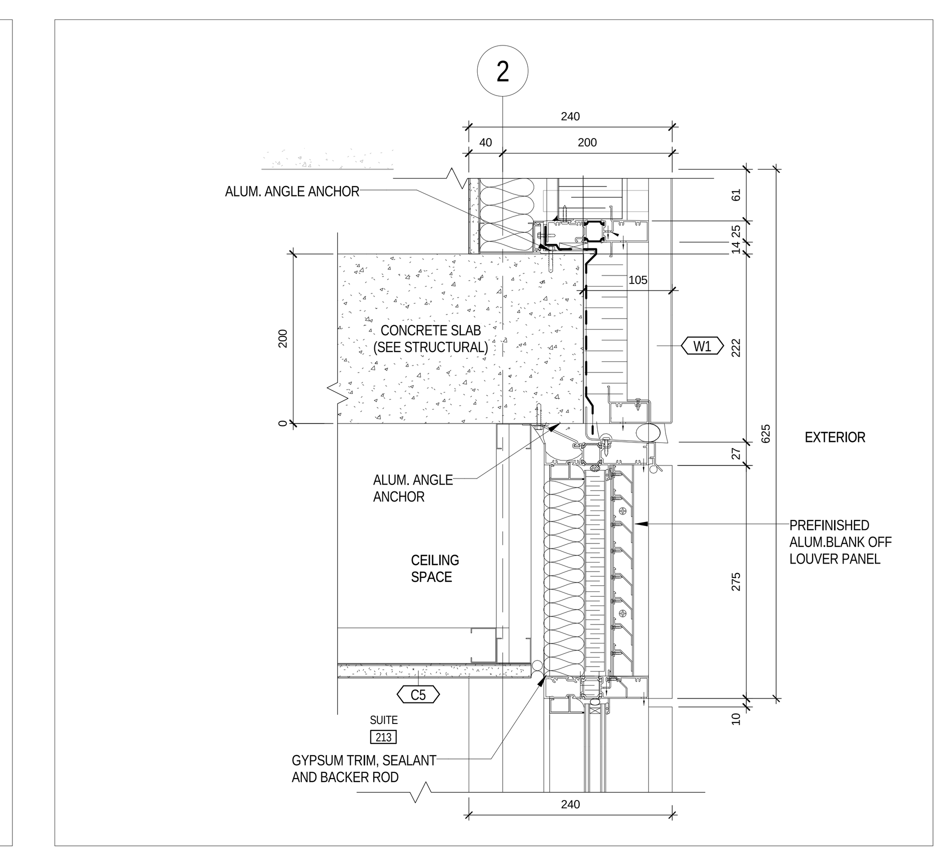

2 TYPICAL LOUVER TO METAL PANEL
2 /A 502 1 : 5

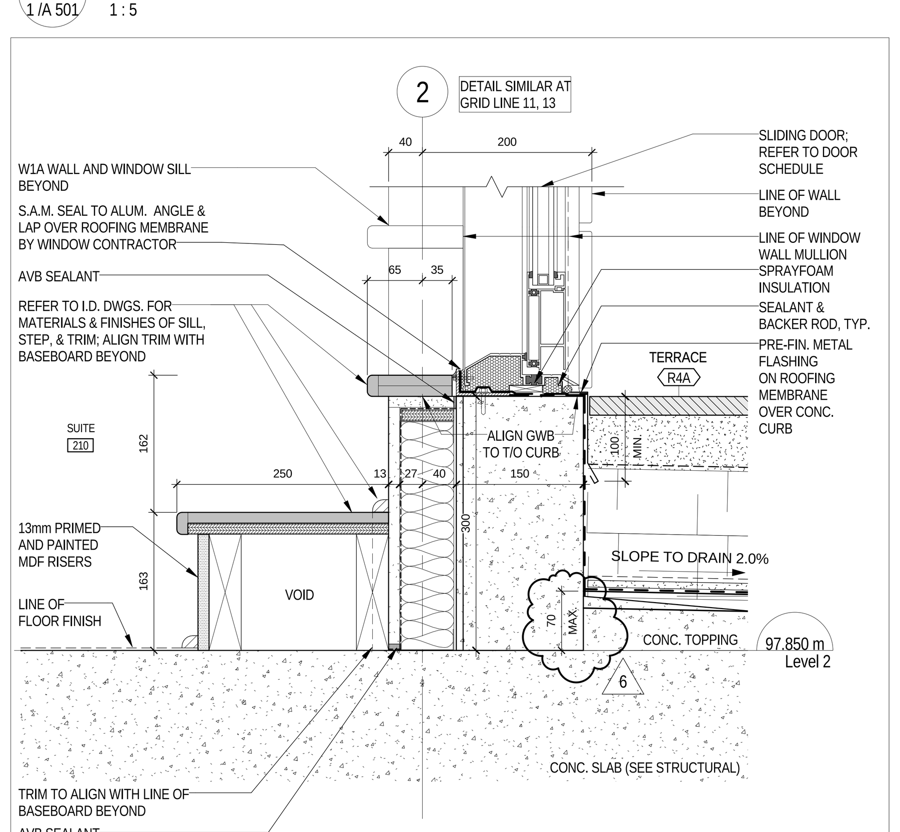

14 TYPICAL SWING DOOR AT 2F RAISED TERRACE
2 /A 502 1 : 5

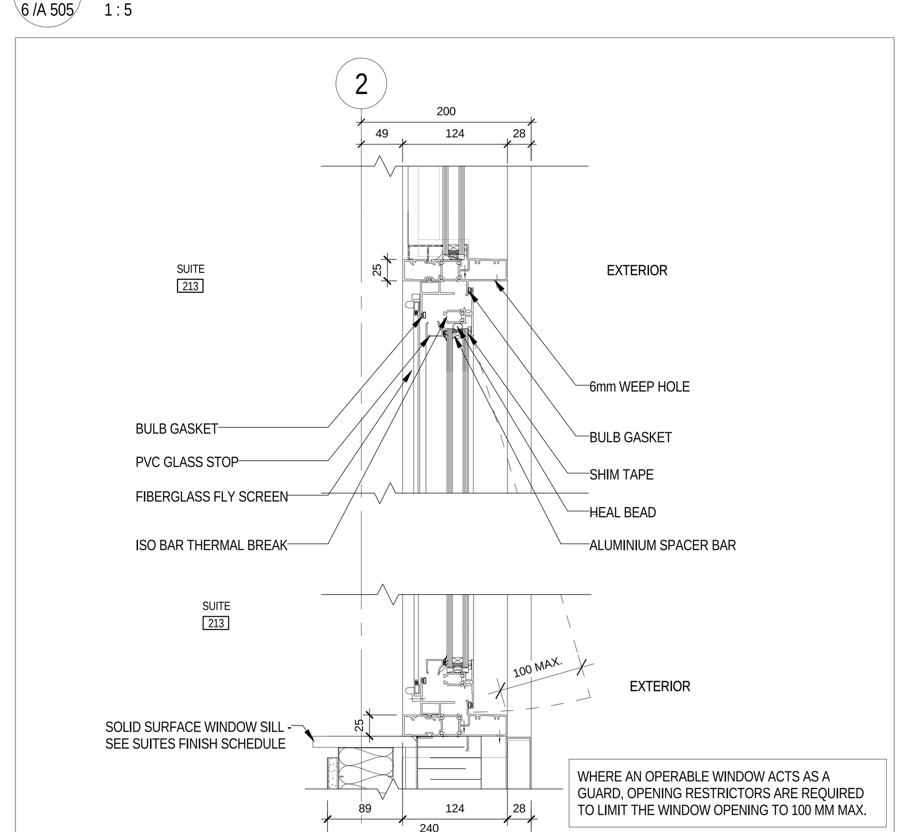

9 TYPICAL AWNING VENT
4 /A 502 1 : 5

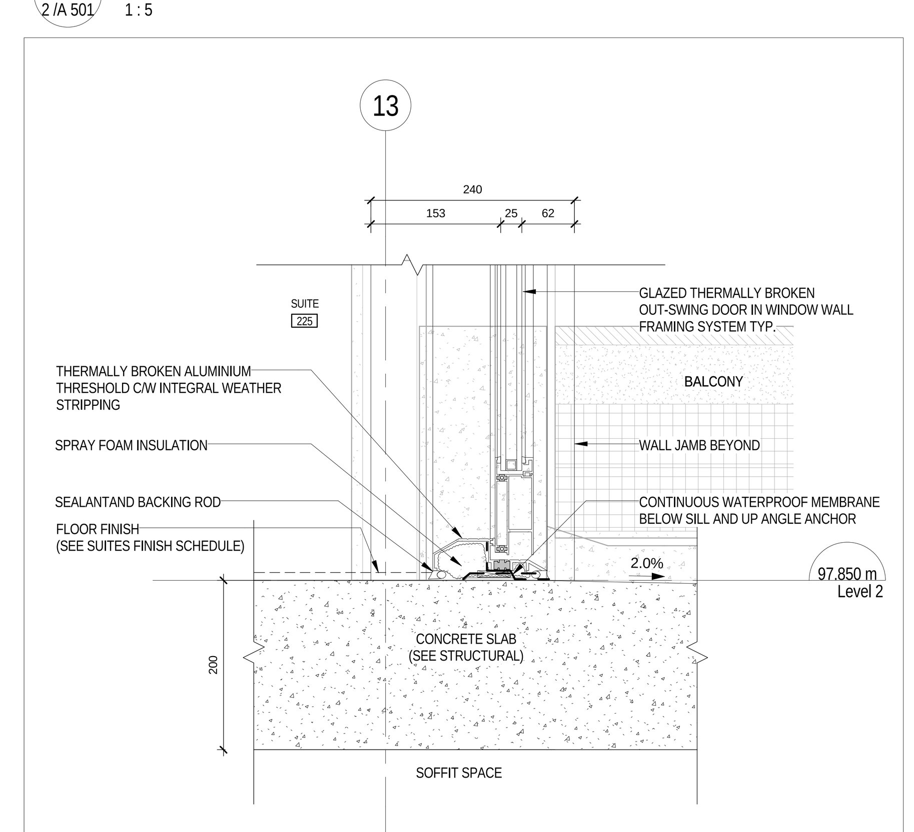

7 TYPICAL DOOR SILL AT BALCONY
8 /A 505 1 : 5

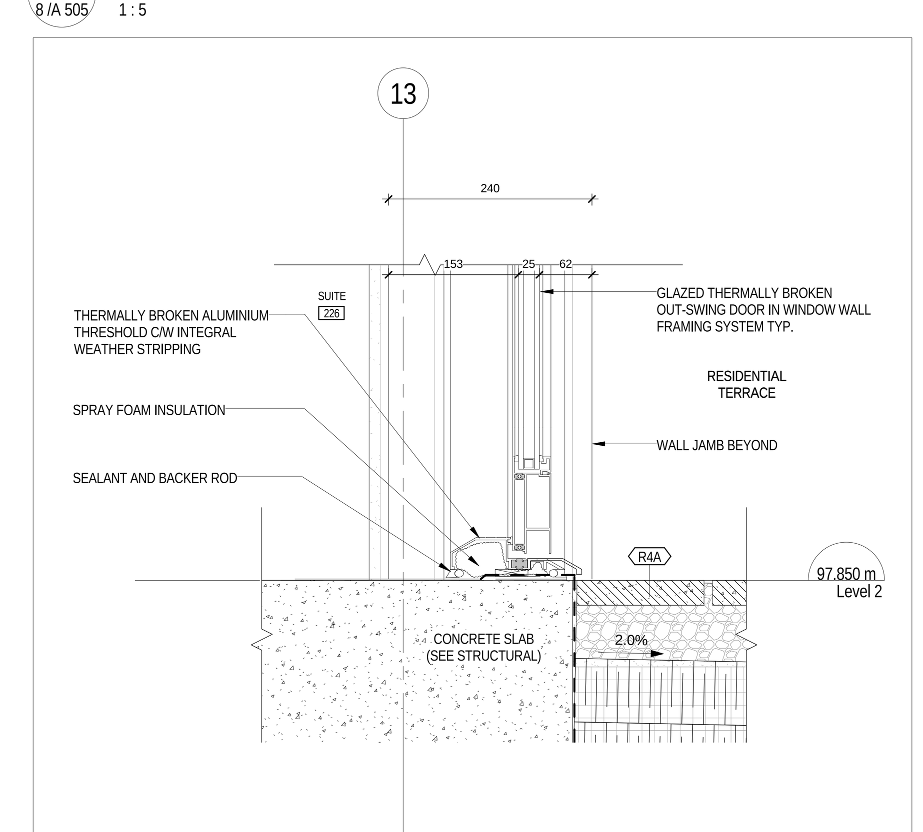

4 TYPICAL SWING DOOR AT SUITE TERRACE
1 /A 504 1 : 5

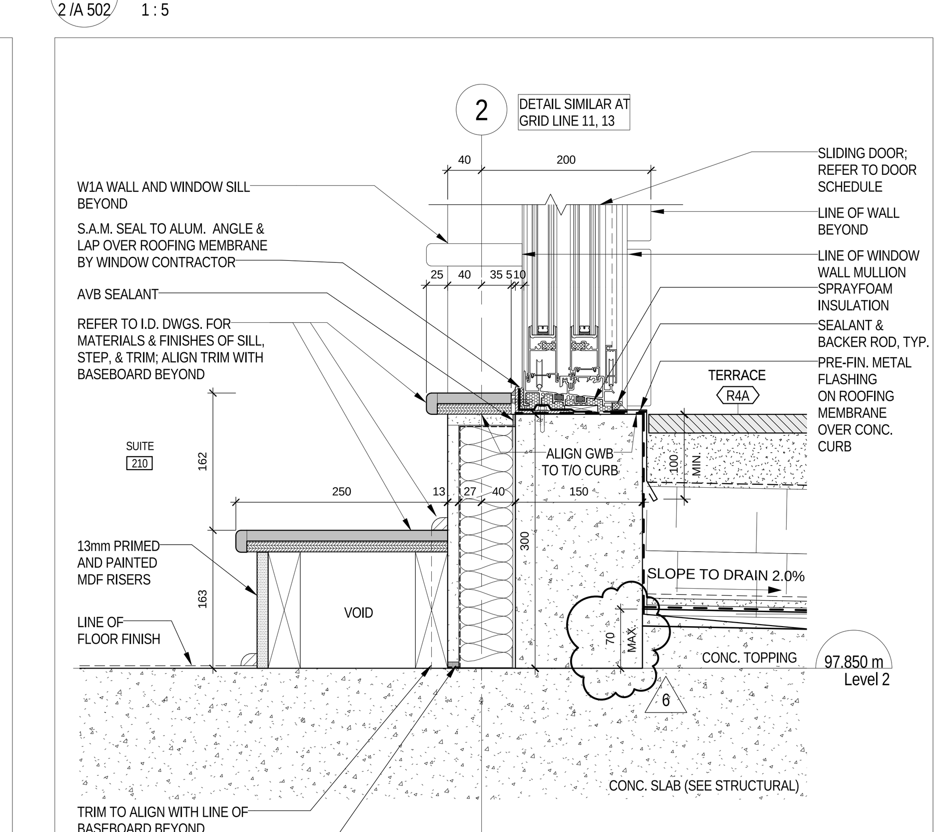

1 TYPICAL SLIDING DOOR AT 2F RAISED TERRACE
2 /A 502 1 : 5

All drawings, specifications, related documents and design are the copyright property of the architect and must be returned upon request. Reproduction of the drawings, specifications, related documents and design in whole or in part is strictly forbidden without the architect's written permission.

This drawing, as an instrument of service, is provided by and is the property of Teeple Architects Inc. and shall be used only for the project named on this drawing and solely for reference purposes only. The contractor is responsible for the coordination and verification of all dimensions contained herein and all measurements and conditions on site as they pertain to these documents. The contractor shall report any discrepancies to the consultant in writing prior to the commencement of any affected work.

DO NOT SCALE THIS DRAWING

This drawing shall not be used for construction purposes unless countersigned

Teeple Architects Inc.

SQ SPADINA QUEEN
TRIDEL®

METRIC SCALE DRAWING
FIRST FLOOR ELEV. +93.60m

No.	ISSUED / REVISED FOR:	DATE:
1	Reissued for Permit	2014-08-22
2	Issued for Tender	2014-08-26
3	Issued for Tender	2014-09-22
4	Issued for Tender	2015-05-05
5	Issued for Drywall Tender	2015-08-19
6	Issued for SI 08 R1	2015-08-26

SQ ALEXANDRA PARK - BLOCK 11
38 CAMERON ST, TORONTO, ONTARIO M5T 2H2

project no:	12-115
scale:	1 : 5
drawn by:	Author
reviewed by:	Checker
date:	2014-09-22

Teeple Architects
5 CAMDEN STREET TORONTO, ONTARIO
416-598-0554-TEL INFO@TEEPLEARCH.COM FAX-416-598-1705

SECTION DETAILS - TYPICAL WALL SECTIONS
A 613