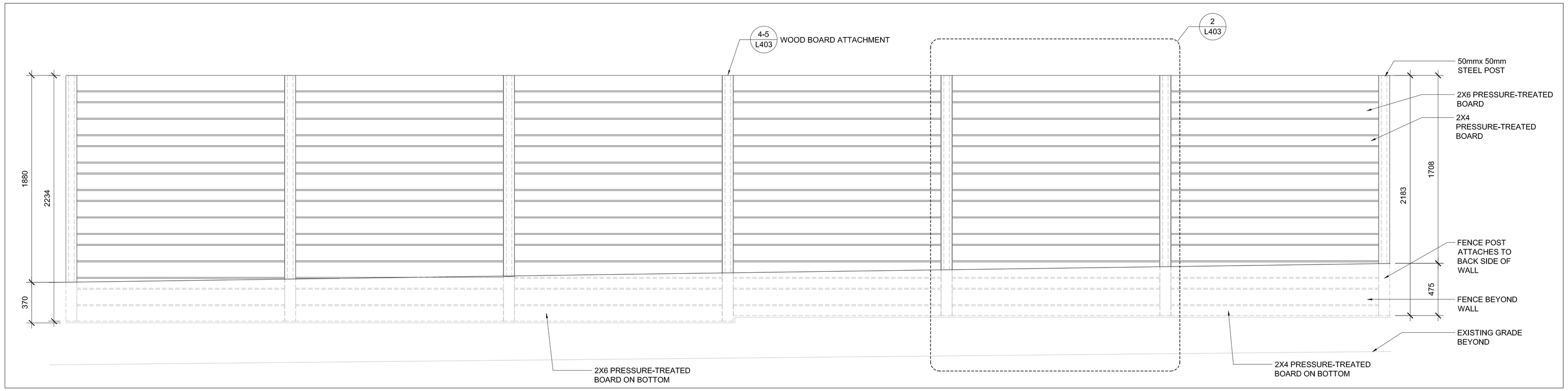

1 WOOD PRIVACY FENCE MOUNTED ON C.I.P. CONCRETE WALL/FLUSH CURB - ELEVATION
SCALE: 1 : 20

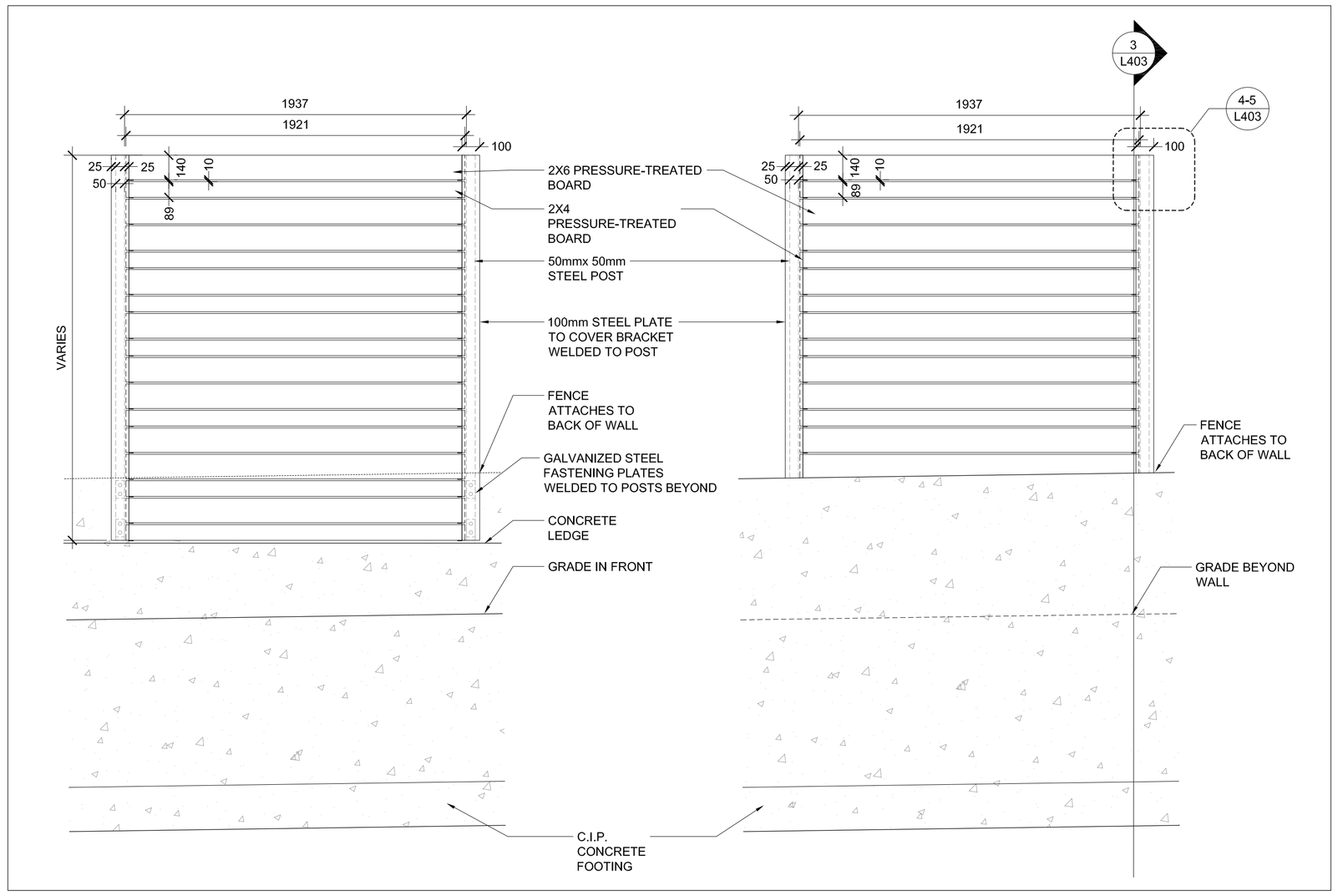

2 WOOD PRIVACY FENCE MOUNTED ON C.I.P. CONCRETE WALL/FLUCH CURB - PANEL
SCALE: 1 : 20

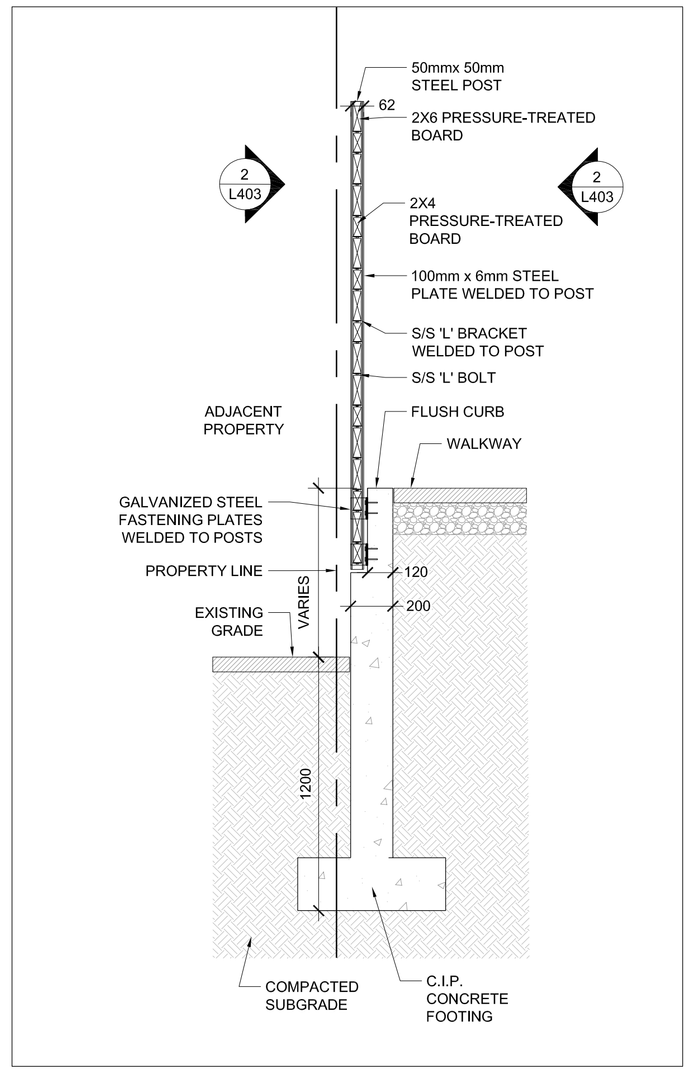

3 WOOD PRIVACY FENCE MOUNTED ON C.I.P. CONCRETE WALL/FLUSH CURB - SECTION
SCALE: 1 : 20

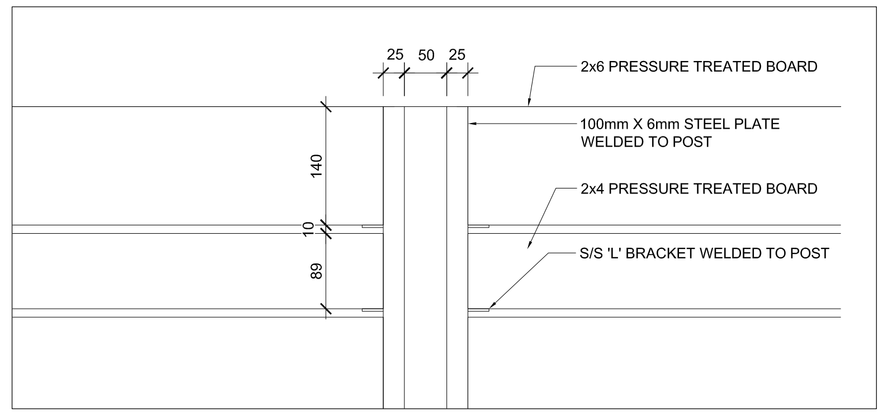

4 WOOD BOARD ATTACHMENT WITH STEEL PLATE COVER
SCALE: 1 : 5

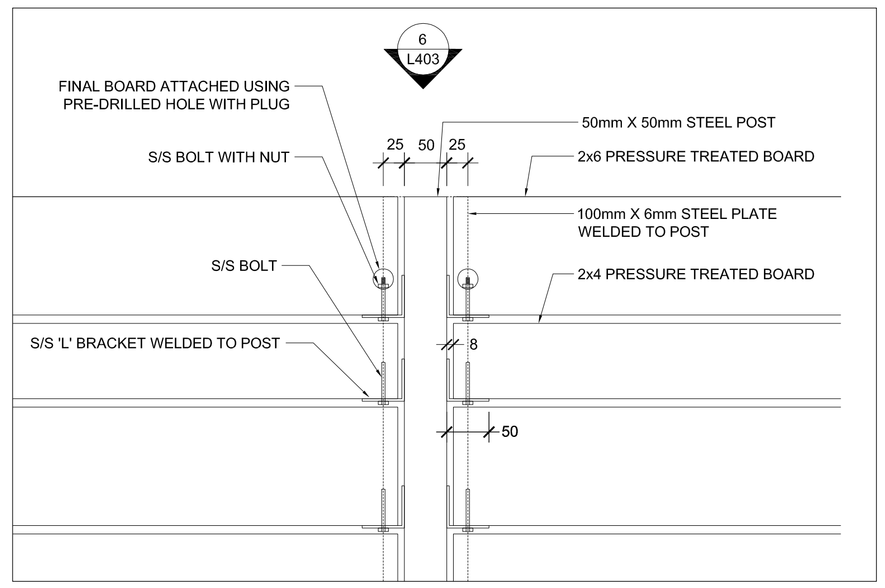

5 WOOD BOARD ATTACHMENT
SCALE: 1 : 5

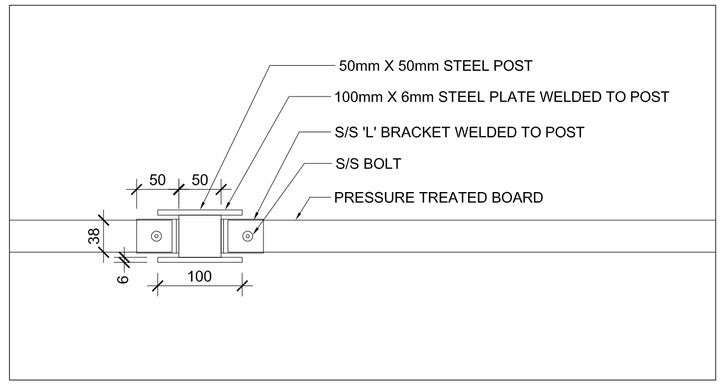

6 WOOD BOARD ATTACHMENT - PLAN VIEW
SCALE: 1 : 5

NOTE:
CONTRACTOR TO PROVIDE
SHOP DRAWINGS FOR
APPROVAL BY LANDSCAPE
ARCHITECT.

NOTES

NOTE:
FOR CONCRETE
REINFORCEMENT REFER TO
STRUCTURAL DOCS.

LEGEND

ISSUE

1	2015-01-07	ISSUED FOR COORDINATION

Janet Rosenberg & Studio
Landscape Architecture and Urban Design
t 416 656 6665 f 416 656 5756 www.jrstudio.ca
148 Kenwood Avenue, Toronto Ontario M6C 2S3 Canada

TRIDEL

TORONTO COMMUNITY
HOUSING CORPORATION

SQ ALEXANDRA PARK - BLOCK 11

LANDSCAPE DETAILS

SCALE:	AS NOTED
DRAWN:	JRS
CHECKED:	JRS
PROJECT NUMBER:	13-101
DRAWING DATE:	2013-02-28

L403