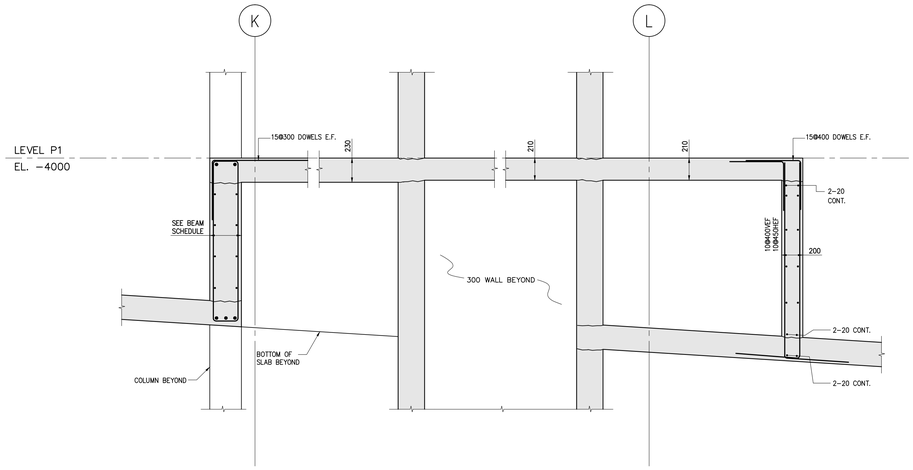

SECTION 1 / S-304
SCALE 1:20

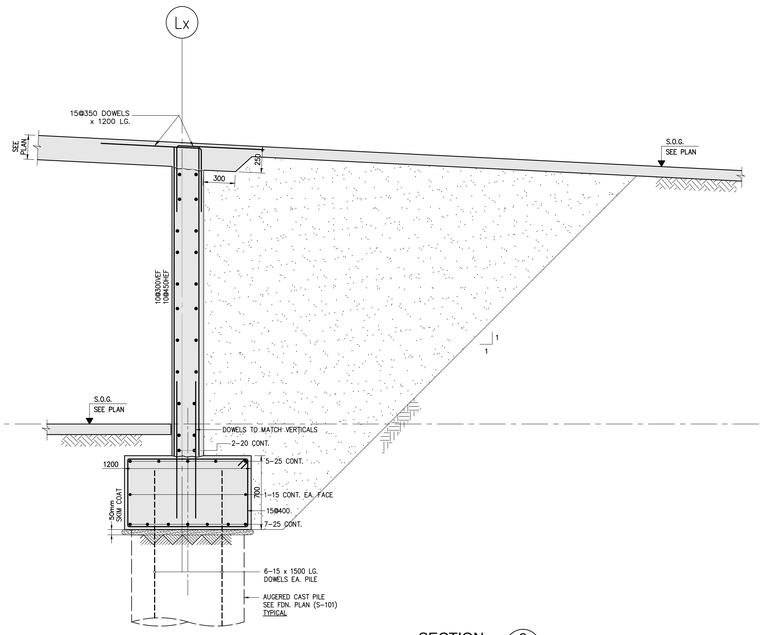

SECTION 2 / S-304
SCALE 1:20

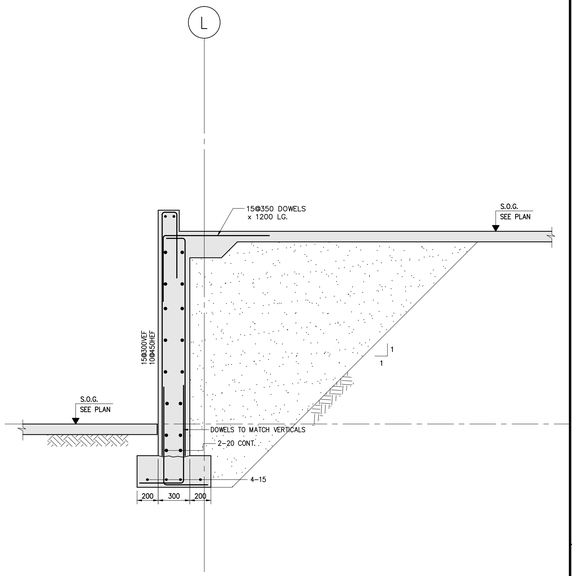

SECTION 3 / S-304
SCALE 1:20

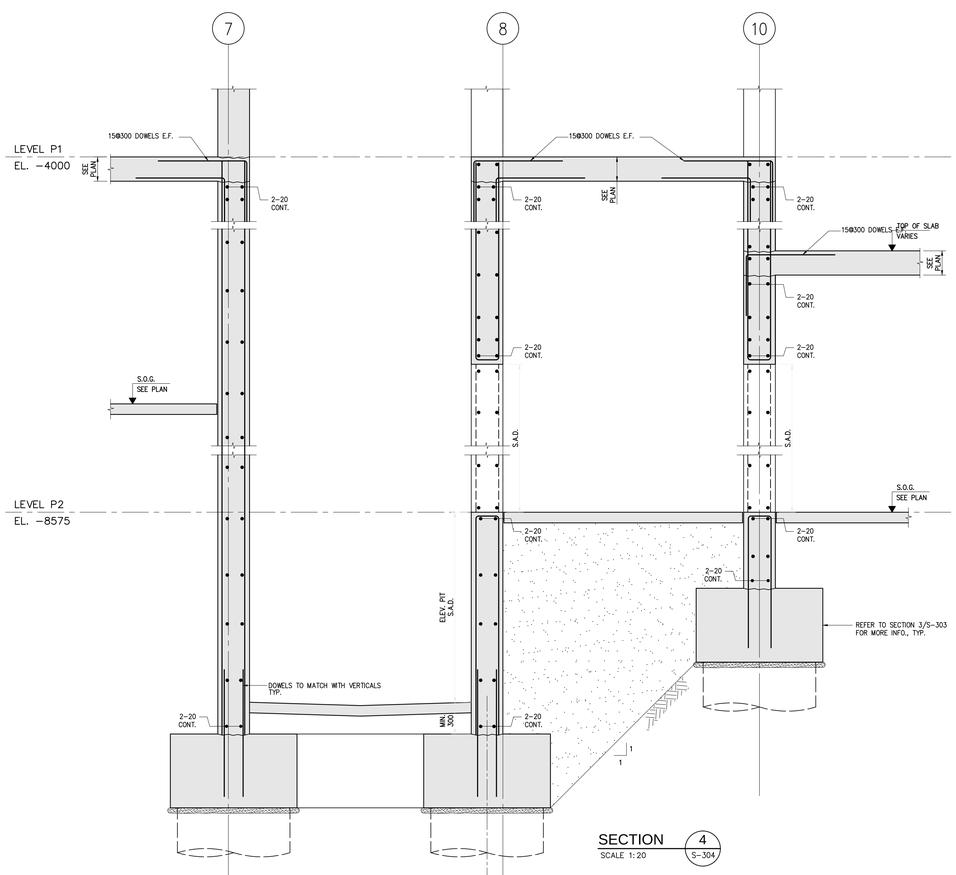

SECTION 4 / S-304
SCALE 1:20

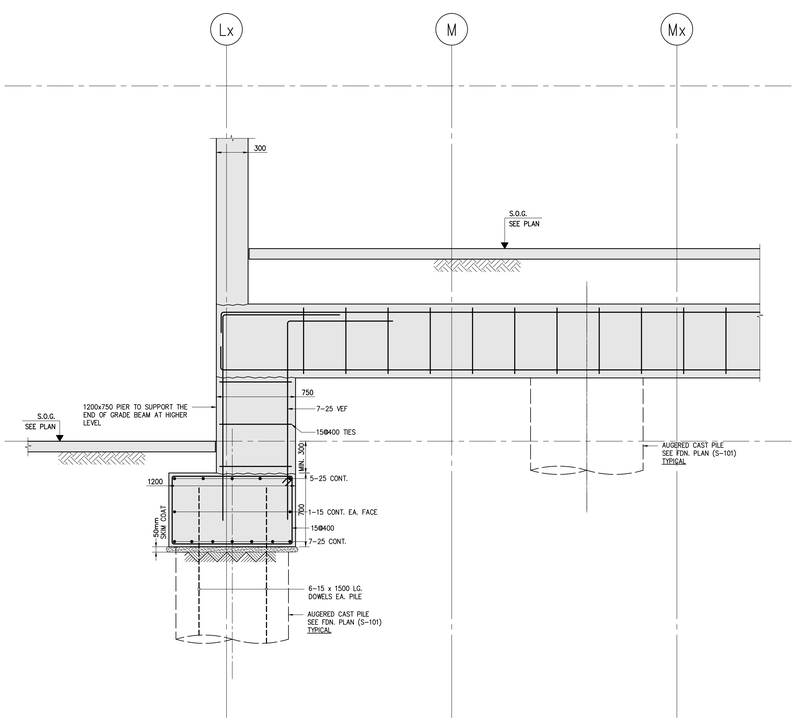

SECTION 5 / S-304
SCALE 1:20

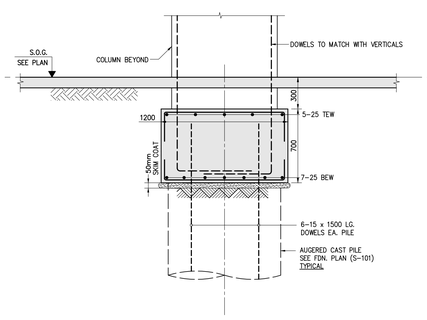

TYPICAL SECTION OF PILE CAP FOR COLUMNS
SCALE 1:20

Jablonsky, Ast and Partners
CONSULTING ENGINEERS
1129 LESLIE STREET
DON MILLS, ON., M3C 2K5
TEL 416-447 7405
FAX 416-447 2771
E-mail jap@astint.on.ca

P.F. AST
13015

IMPERIAL SCALE DRAWING
FIRST FLOOR ELEV. 93.60m

no.	issued / revised	date:
1	ISSUED FOR PERMIT	2014-05-30
2	REISSUED FOR PERMIT	2014-07-11

ALEXANDRA PARK - BLOCK 11
TORONTO, ONTARIO

project no:	13015
scale:	1:25
drawn by:	H.W.
reviewed by:	HOLMAN
date started:	MARCH 2014

FOUNDATION SECTION

S-304

2014-07-11

1219x914

C:\Projects\13015 ALEXANDRA PARK BLOCK-11\STRUCT\S-301-S-305 FND-SECTIONS.dwg, 2014-07-11 2:07pm

C:\Projects\13015 ALEXANDRA PARK BLOCK-11\STRUCT\S-301-S-305 FND-SECTIONS.dwg, 11/07/2014 2:07:29 PM, 11191 (914.00 x 1220.00 MM), Helen