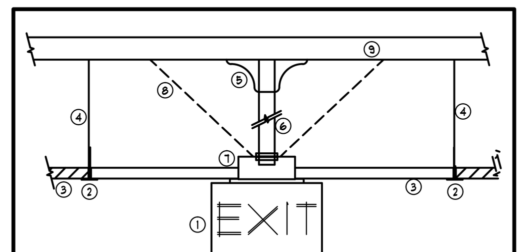

NOTES:
1. SURFACE EXIT FIXTURE OR EMERGENCY LIGHTING UNIT.
2. CEILING SUSPENSION SYSTEM.
3. CEILING TREATMENT.
4. CEILING SUSPENSION SYSTEM.
5. CEILING TREATMENT.
6. CEILING SUSPENSION SYSTEM HANGER.
7. THREADED BASE SUPPORT.
8. 19mm RIGID CONDUIT.
9. OUTLET BOX TO SUIT FIXTURE.
10. LATERAL SUPPORT WHERE CONDUIT EXCEEDS 900mm.
11. ROOF DECK/FLOOR ASSEMBLY

1 SURFACE EXIT FIXTURE

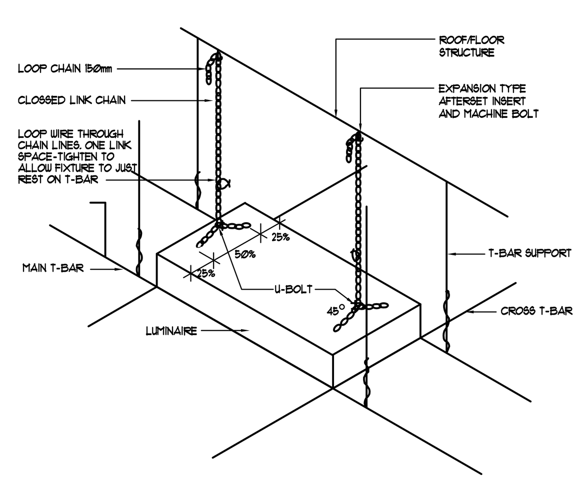

2 LUMINAIRE SUSPENSION DETAIL, T-BAR CEILING

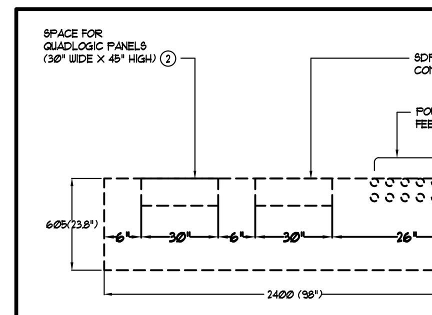

NOTES:
1. ELECTRICAL CONTRACTOR SHALL COORDINATE WITH PROVIDENT ENERGY MANAGEMENT TO PROVIDE CT COMPARTMENT EACH SUITE DISTRIBUTION PANEL (SDP).
2. SPACE FOR QUADLOGIC PANELS TO BE SUPPLIED BY OTHERS AND INSTALLED BY DIVISION 16. TOTAL OF 9 PANELS ON EACH METERING FLOOR. REFER TO QUADLOGIC SHOP DRAWINGS.

3 TYPICAL ELECTRICAL CLOSET DETAIL

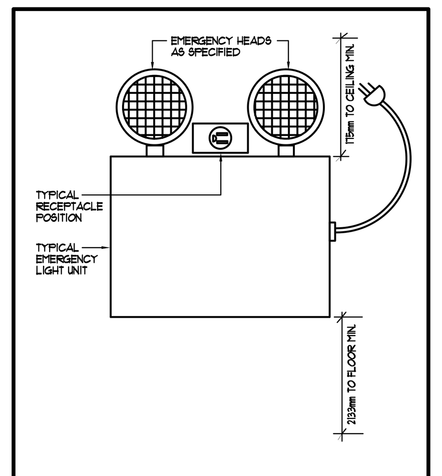

4 MOUNTING HEIGHT DETAIL OF EMERGENCY BATTERY PACK

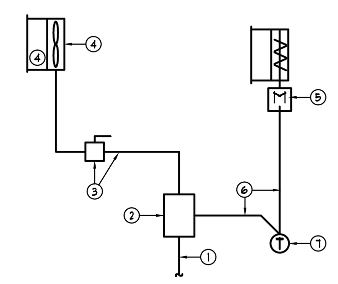

NOTES:
1. POWER WIRING AND CONDUIT BY DIV. 16
2. MAGNETIC STARTER BY DIV. 15 IF REQUIRED
3. POWER WIRING AND CONDUIT, SAFETY SWITCH BY DIV. 16
4. FAN BY DIV. 15
5. LINE VOLTAGE ACTUATOR BY DIV. 15
6. LINE VOLTAGE CONTROL WIRING AND CONDUIT BY DIV. 16
7. LINE VOLTAGE THERMOSTAT BY DIV. 15

5 EXHAUST FAN/MOTORIZED INTAKE DAMPER WIRING DIAGRAM

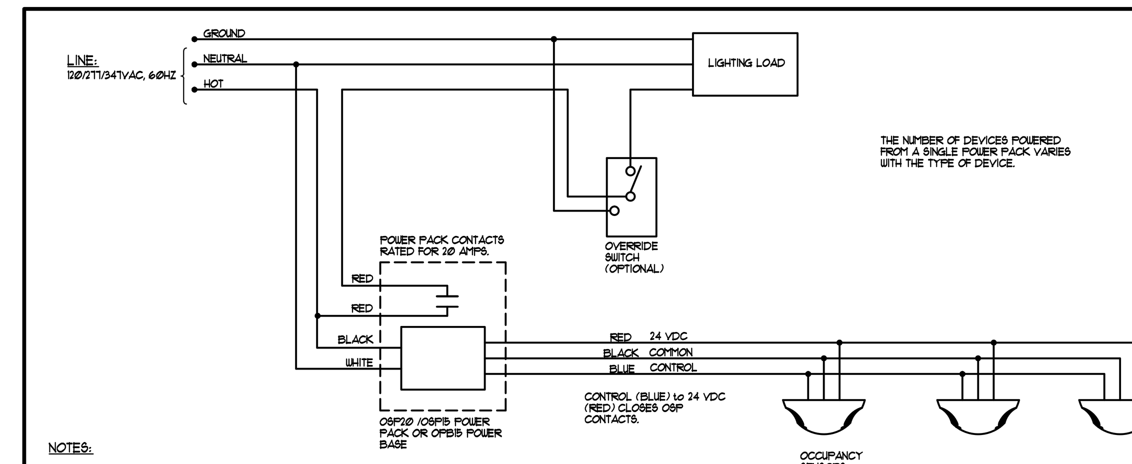

NOTES:
1. 3 OR LESS OCCUPANCY SENSORS IN 1 LIGHTING CIRCUIT

6 LIGHTING CONTROL BLOCK DIAGRAM

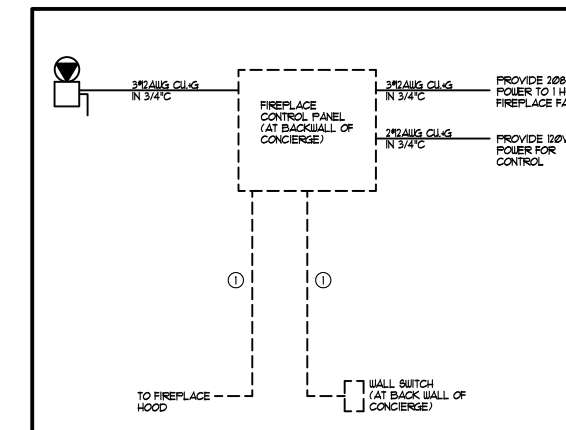

NOTES:
1. DIV. 16 TO PROVIDE EMPTY 1/2"EMT FOR LOW VOLTAGE WIRING BY FIREPLACE CONTRACTOR.

7 FIREPLACE CONNECTION DIAGRAM

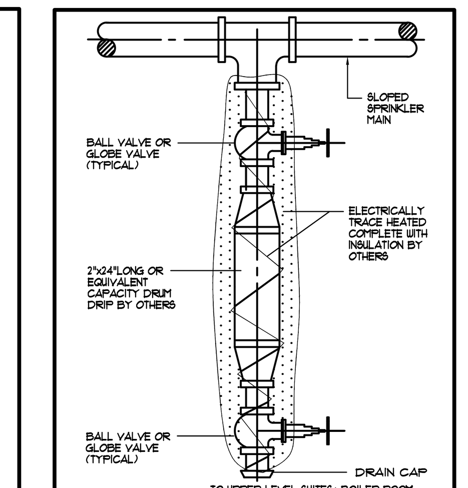

8 DRUM DRIP - AT LOW POINT- DETAIL

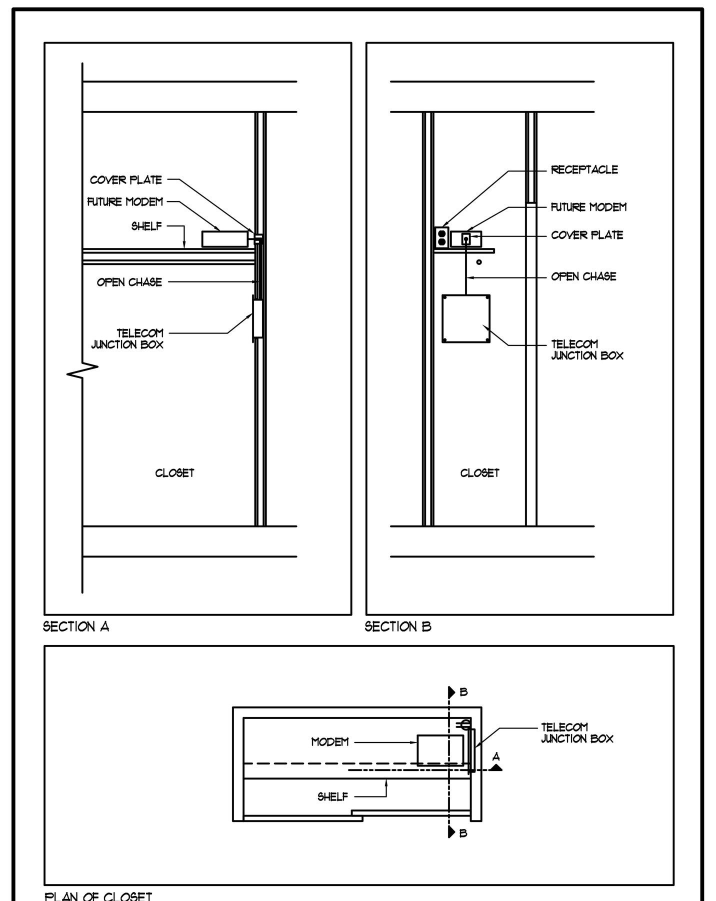

9 TELECOMMUNICTION BOX INSTALLATION DETAIL

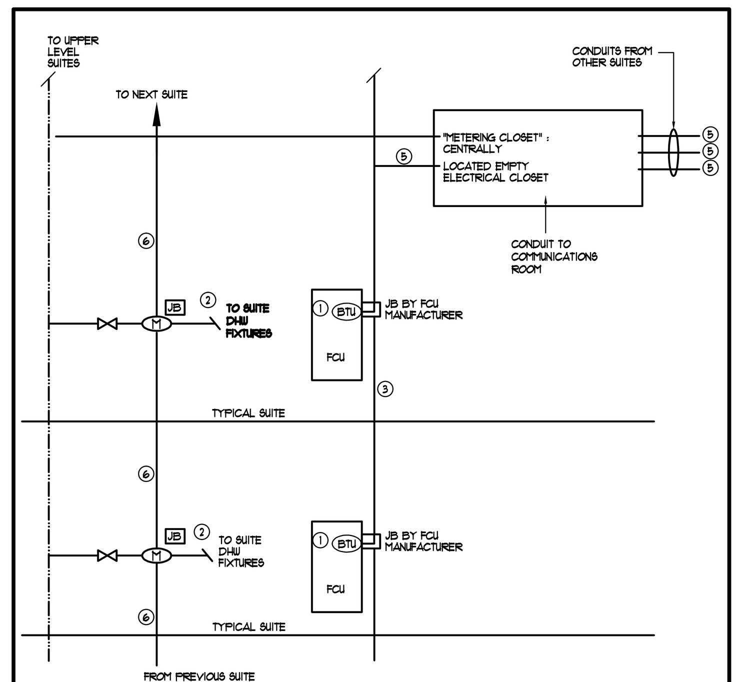

NOTES:
1. BTU METER INTEGRAL TO FAN COIL UNIT, INSTALLED BY FCU MANUFACTURER.
2. DOMESTIC HOT WATER METER LOCATED NEXT TO SUITE SHUT OFF VALVE. METER IS INSTALLED BY DIV. 15.
3. DIV. 16 TO SUPPLY AND INSTALL 1/2" EMT CONDUIT. DIV. 16 TO PULL SIGNAL WIRE, WIRE SUPPLIED BY OTHERS.
4. DIV. 16 TO SUPPLY AND INSTALL 1/2" IN-SLAB CONDUIT FROM WATER METER TO JB AT SUITE FAN COIL. DIV. 16 TO PULL SIGNAL WIRE& WIRE SUPPLIED BY OTHERS. FINAL CONNECTION TO METERS BY OTHERS.
5. DIV. 16 TO PROVIDE IN-SLAB CONDUIT AT MID-LEVEL FLOOR FROM VERTICAL RISERS TO CENTRAL METERING LOCATION.
6. DIV. 16 TO INSTALL 1/2" EMT CONDUIT TO CONNECT WATER METERS AT EVERY SUITE AS A DEDICATED RISER.
7. THIS DETAIL IS TYPICAL FOR BOTH LOFT AND MAIN TOWER SUITES.

10 TYPICAL SUITE WATER/BTUMETERING DETAIL

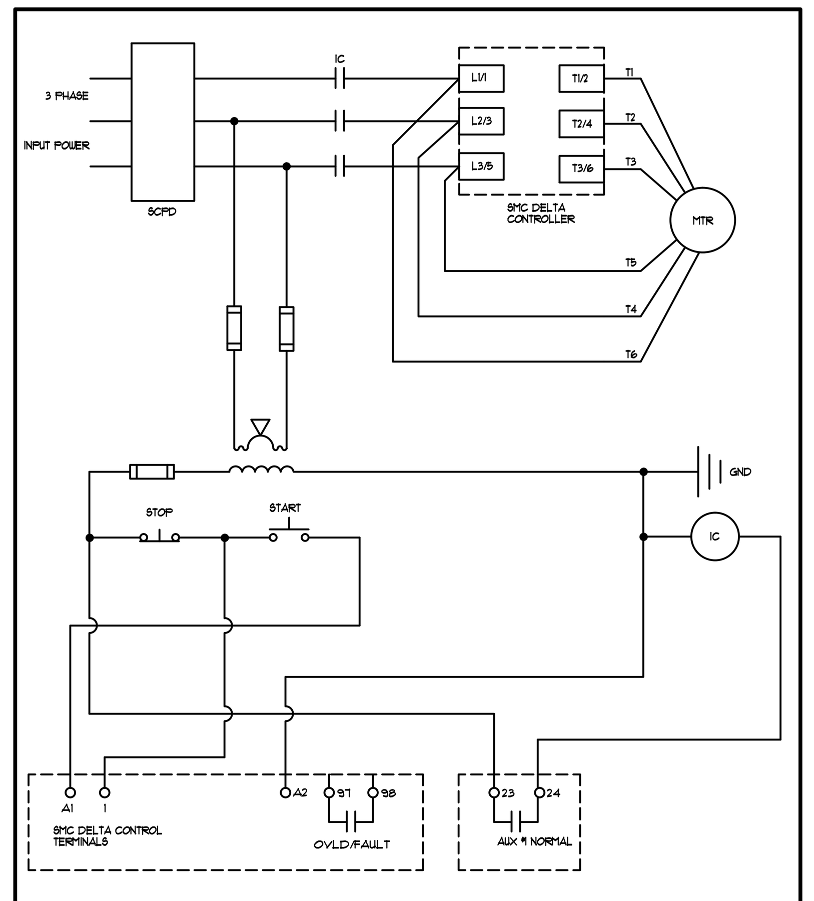

11 SMC-DELTA WIRING DIAGRAM: THREE WIRE CONTROL WITH OPTIONAL ISOLATION CONTACTOR

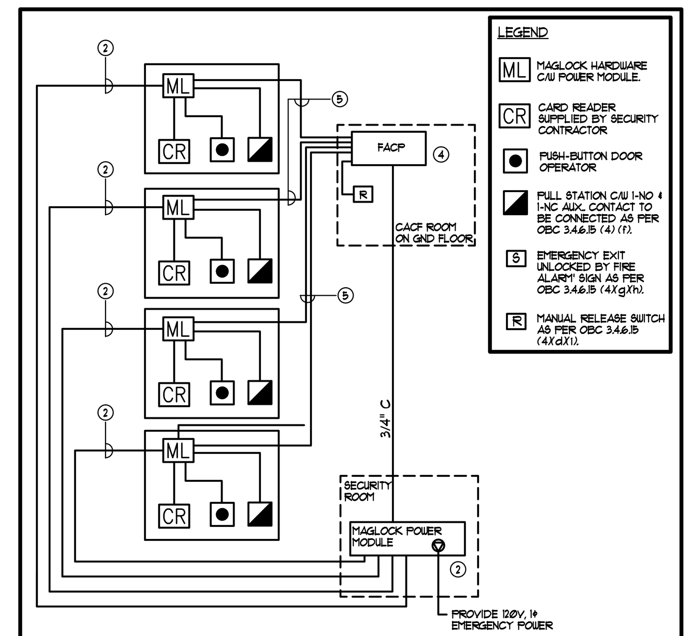

NOTES:
1. CONSULT SECURITY CONTRACTOR PRIOR TO SELECT OF MAGLOCK SUPPLIER.
2. CONNECT MAGLOCK POWER MODULES TO THE NEAREST EMERGENCY CIRCUIT . (WIRE SIZE: 2#12 AWG).
3. PROVIDE 3/4"C FOR 24V DC POWER FROM MAGLOCK POWER MODULE.
4. CONNECTION AUXILIARY CONTACT FROM FACP TO RELEASE ALL MAGLOCK UPON ACTUATION OF A FIRE ALARM SIGNAL.
5. MAGLOCK TO RELEASE UPON POWER FAILURE OR FAILURE OF FIRE ALARM WIRING AS PER OBC. 3.4.6.15.(4), (c).
6. THE OPERATION OF ANY BY-PASS SWITCH WHERE PROVIDED FOR TESTING OF THE FIRE ALARM SYSTEM, CAUSES AN AUDIO & A VISUAL SIGNAL TO BE INDICATED AT THE FAAP. (OBC 3.4.6.15.(4), (j).
7. FIRE ALARM PULL STATIONS ARE REQUIRED TO BE LOCATED AT NOT MORE THAN 600mm FROM THE DOOR EQUIPPED WITH A MAGLOCK (OBC, 3.4.6.15.4.(f).

12 MAGLOCK CONNECTION BLOCK DIAGRAM

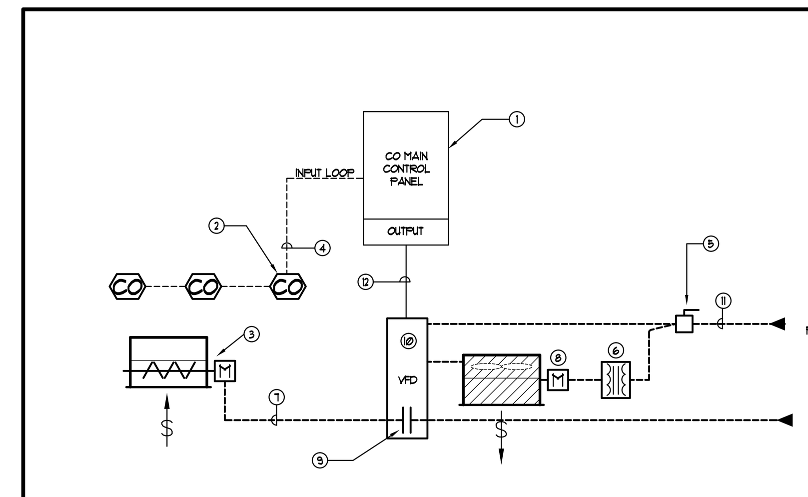

NOTES:
1. CO MAIN CONTROL PANEL AT CACF ROOM TO BE MONITORED BY BAS. CO DETECTION SYSTEM BY ELECTRICAL CONTRACTOR.
2. CO SENSORS FOR PARKING VENTILATION BY ELECTRICAL CONTRACTOR (TYPICAL).
3. INTAKE LOUVRE AND MOTORIZED DAMPER BY MECHANICAL CONTRACTOR.
4. CO DETECTION SYSTEM CONTROL WIRING AND CONDUIT BY ELECTRICAL CONTRACTOR.
5. 575V SAFETY SWITCH, WIRING AND CONDUIT BY ELECTRICAL CONTRACTOR.
6. 575V/115V STEP DOWN TRANSFORMER SUPPLIED BY MECHANICAL CONTRACTOR AND INSTALLED BY ELECTRICAL CONTRACTOR.
7. 115V WIRING AND CONDUIT BY ELECTRICAL CONTRACTOR.
8. EXHAUST FAN BY MECHANICAL CONTRACTOR.
9. AUXILIARY DRY CONTACT FROM VFD STARTER TO ACTIVATE DAMPER WHEN FAN IS RUNNING.
10. EXHAUST FAN VFD C/W AUXILIARY DRY CONTACT SUPPLIED BY MECHANICAL CONTRACTOR AND INSTALLED BY ELECTRICAL CONTRACTOR.
11. 575V WIRING AND CONDUIT BY ELECTRICAL CONTRACTOR.
12. OUTPUT WIRING SUPPLIED BY DIV. 16

13 CO MAIN PANEL (FOR PARKING VENTILATION) CONTROL DETAIL

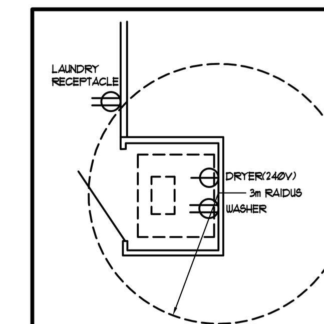

NOTES:
1. A RECEPTACLE IS PERMITTED TO BE INSTALLED WITHIN A 3m RADIUS OUTSIDE OF A LAUNDRY CLOSET.

14 RECEPTACLE FOR LAUNDRY CLOSET

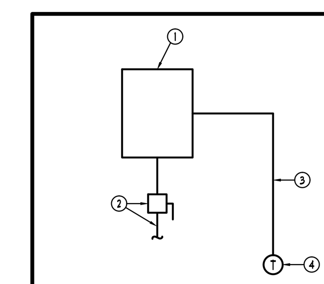

NOTES:
1. HEATER BY DIV. 15
2. POWER WIRING, CONDUIT AND SAFETY SWITCH BY DIV. 16
3. LOW VOLTAGE CONTROL WIRING BY DIV. 15. CONDUIT BY DIV. 16
4. LOW VOLTAGE THERMOSTAT BY DIV. 15

15 UNIT HEATER WIRING DIAGRAM

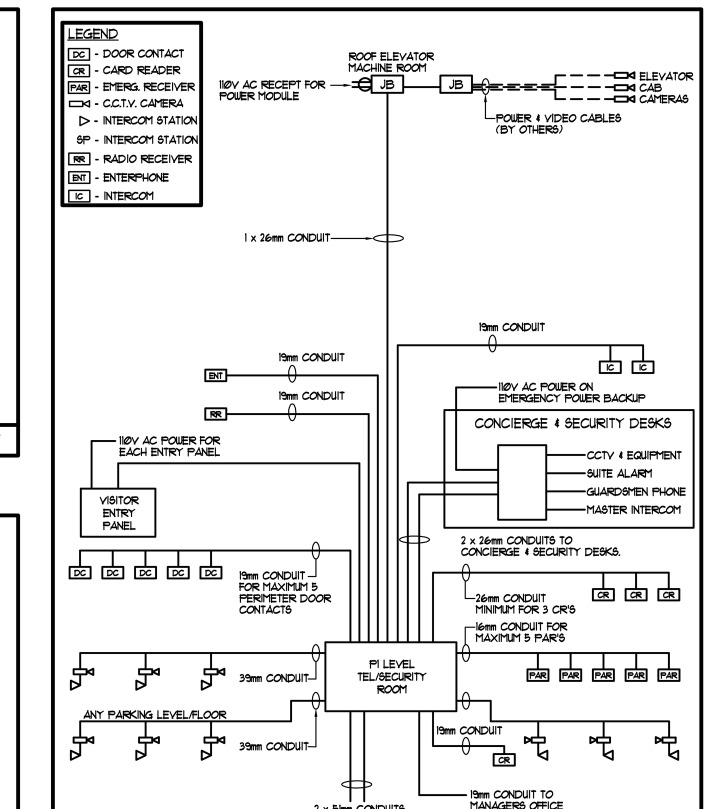

NOTES:
1. MAXIMUM 3 CAMERAS PER HOME RUN.
2. PROVIDE DOOR OPERATORS FOR ALL ENTRANCE DOORS FROM PARKING TO RESIDENTIAL ELEV. LOBBIES.
3. 19mm=3/4", 26mm=1", 32mm=1.25", 39mm=1.5", 51mm=2".

16 SECURITY CONNECTION DIAGRAM DETAIL

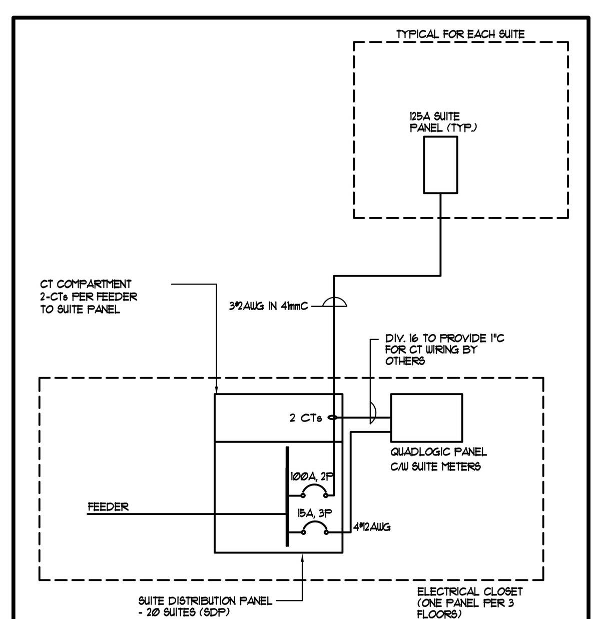

NOTES:
11. DIV. 16 TO PROVIDE AN INTEGRATED PANEL CONSISTING OF A REGULAR PANELBOARD AND A CT COMPARTMENT.
22. DIV. 16 TO PURCHASE 2CT'S PER SUITE FROM PROVIDENT AND INSTALL AT CT COMPARTMENT AT SUITE FEEDER CABLES. DIV. 16 TO CONNECT CT'S TO QUADLOGIC PANELS.
33. 3/4" CONDUIT BY DIV. 16, WIRING BY OTHERS.

17 QUADLOGIC INTERCONN. BLOCK DIAGRAM

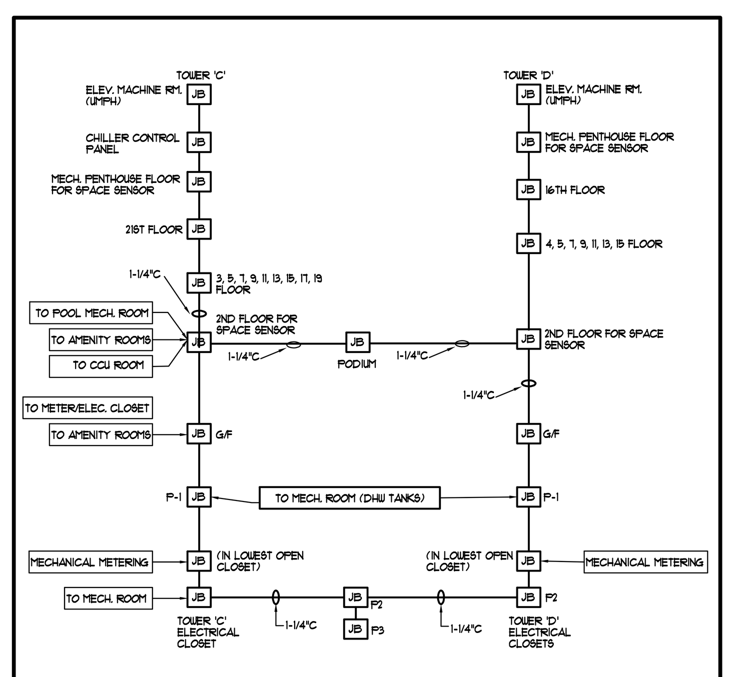

NOTES:
1. RISER CONDUIT SHALL BE 1-1/4"C (TYPICAL).
2. BRANCH CONDUITS SHALL BE 13mm (TYPICAL). UNLESS OTHERWISE NOTED.

18 METERING & EMS RISER

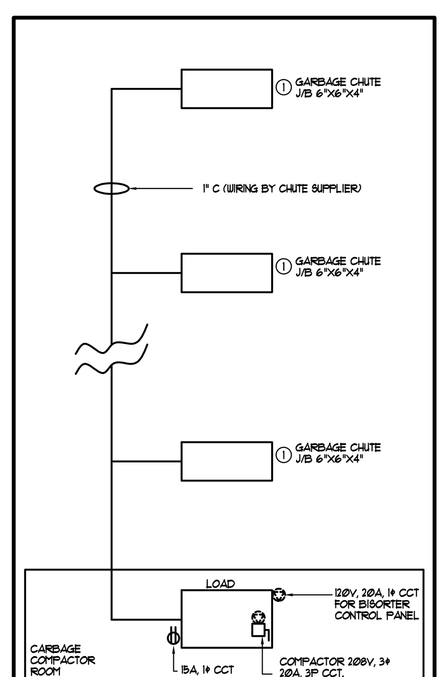

NOTES:
1. 1 JUNCTION BOX PER FLOOR

19 BISORTER

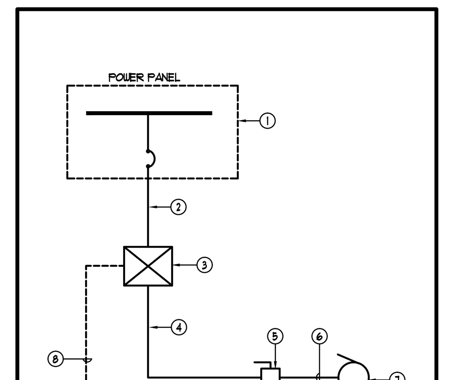

BY DIV. 16		BY DIV. 15	
ITEM	DESCRIPTION	ITEM	DESCRIPTION
1	CIRCUIT BREAKER.	3	MOTOR STARTER
2, 4	CABLE IN EMT/ENT.	7	MOTOR
		8	CONTROL WIRING
5	SAFETY DISCONNECT.		
6	CABLE IN LIQUID TIGHT FLEXIBLE CONDUIT.		

20 MOTOR DRIVE AND STARTER CONNECTION, DIVISION OF RESPONSIBILITIES

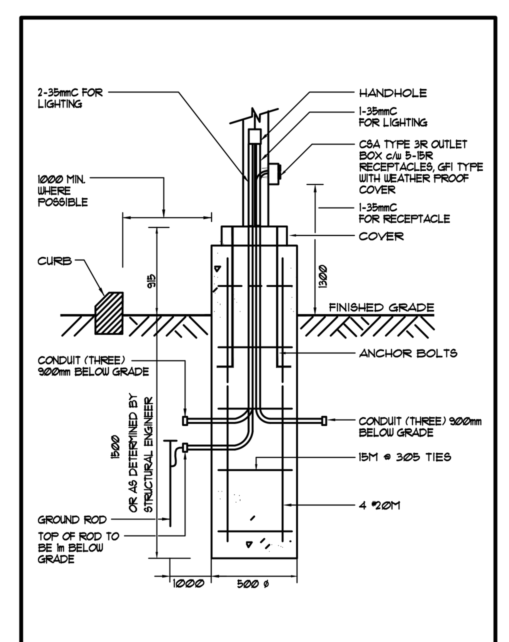

NOTES:
1. ALL CONDUITS SHALL BE 35mm RIGID PVC.
2. SEE PLAN FOR NUMBER AND SIZE OF SLEEVES/CONDUITS.
3. CONCRETE STRENGTH 20 MPa.
4. PLACE CONCRETE IN PRE AUGERED HOLES.

21 LIGHTING POLE BASE DETAIL

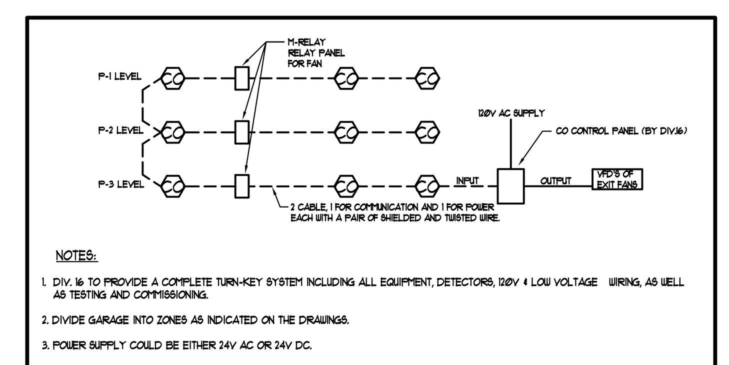

NOTES:
1. DIV. 16 TO PROVIDE A COMPLETE TURN-KEY SYSTEM INCLUDING ALL EQUIPMENT, DETECTORS, 120V & LOW VOLTAGE WIRING, AS WELL AS TESTING AND COMMISSIONING.
2. DIVIDE GARAGE INTO ZONES AS INDICATED ON THE DRAWINGS.
3. POWER SUPPLY COULD BE EITHER 24V AC OR 24V DC.
4. NUMBER OF ZONES CAN BE SETUP AND EXTENT THROUGH PROGRAMMING AT THE CO CONTROL PANEL.

22 CO SYSTEM CONDUIT CONNECTION DIAGRAM

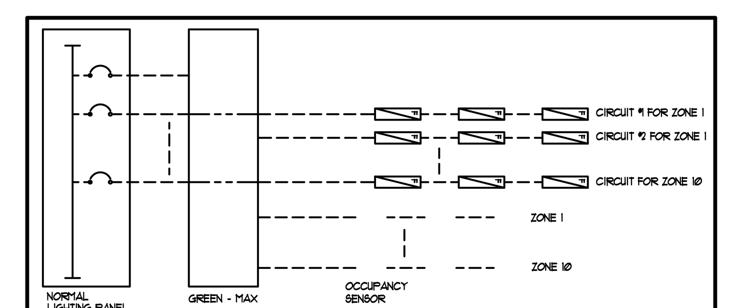

23 OCCUPANCY SENSOR CONNECTION DIAGRAM

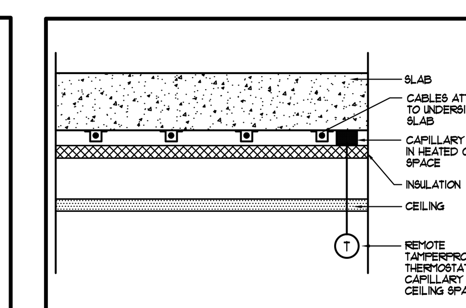

NOTE:
ALL CABLES TO BE DISTRIBUTED EVENLY THROUGHOUT SPACE FOR.

24 FLOOR WARMING SCHEMATIC DIAGRAM DETAIL

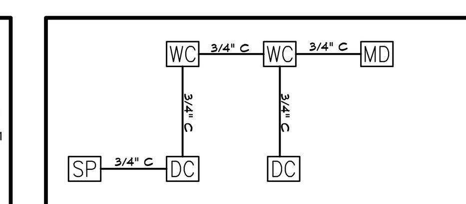

NOTES:
1. DIV. 16 TO PROVIDE ROUGH-IN OUTLET BOXES AND EMPTY CONDUITS C/W PULLSTRINGS FOR ALL SECURITY DEVICES.
2. EVERY OPERABLE WINDOW IS TO BE PROVIDED WITH A WINDOW CONTACT (WC) BY SECURITY CONTRACTOR. DIV. 16 TO PROVIDE ROUGH-IN OUTLET BOX.

25 IN-SUITE SECURITY CONNECTION DETAIL

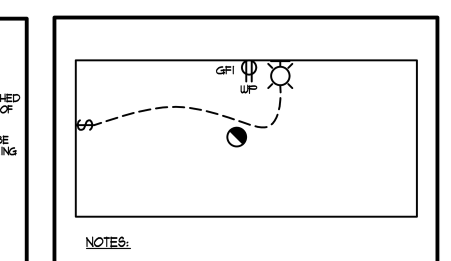

NOTES:
1. CONNECT LIGHTING FIXTURE AND GFI WATERPROOF RECEPTACLE TO DEDICATED EMERGENCY POWER CCT.

26 TYPICAL ELEVATOR PIT DETAIL

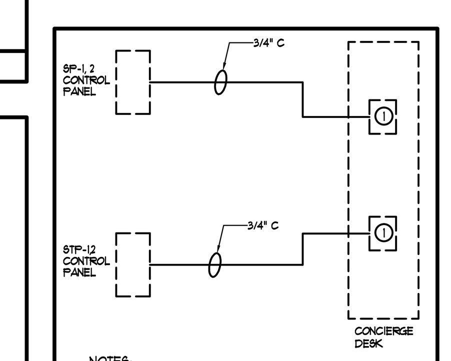

NOTES:
1. DIV. 15 TO PROVIDE HOA SWITCH AND LOW VOLTAGE WIRING.

27 SP & STP MONITORING SYSTEM CONDUIT CONNECTION DIAGRAM

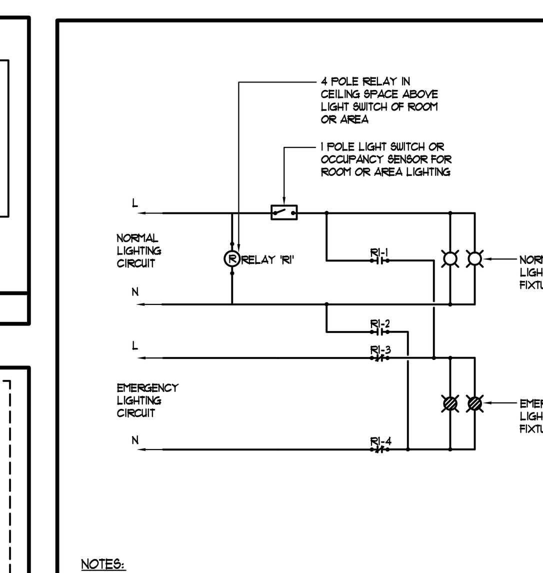

NOTES:
1. RELAY TO HAVE CONTACTS AS SHOWN WHEN COIL IS IN THE DE-ENERGIZED STATE TO PROVIDE 'FAIL SAFE' BY-PASS OF THE LIGHT SWITCH.
2. THE 1 POLE LIGHT SWITCH SHALL CONTROL NORMAL AND EMERGENCY LIGHTS AND THE EMERGENCY LIGHTS SHALL REMAIN OR TURN 'ON' AUTOMATICALLY WITH LOSS OF NORMAL POWER TO THE LIGHT FIXTURES.
3. THIS CONTROL SHALL BE PROVIDED FOR ALL ROOMS AND AREAS WHERE IT IS NECESSARY TO CONTROL NORMAL AND EMERGENCY LIGHTS IN THE ROOM OR AREA FROM ONE COMMON SWITCH.

28 TYPICAL AUTOMATIC EMERGENCY LIGHTING CONTROL DIAGRAM

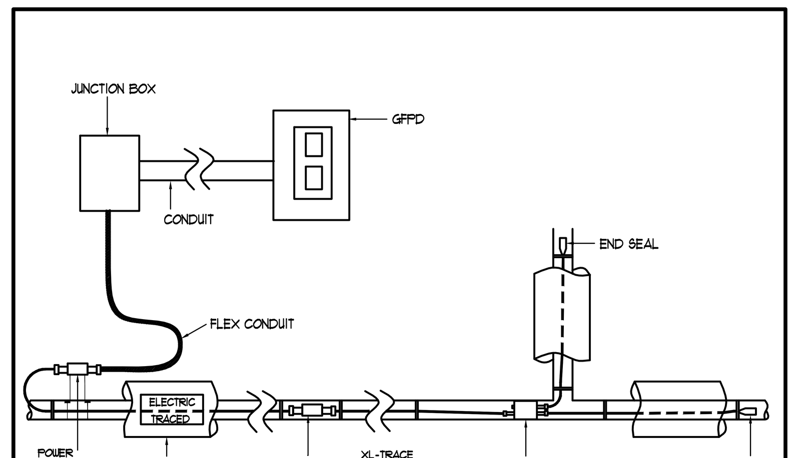

NOTES:
1. THE HEATING CABLE IS PERMANENTLY SECURED TO INSULATED METALLIC OR PLASTIC PIPING.
2. A 30-mA NOMINAL GROUND-FAULT PROTECTION DEVICE(GFPD) IS USED.
3. THE HEATING CABLE IS INSTALLED PER MANUFACTURER'S INSTRUCTIONS WITH APPROVED RAYCHEM COMPONENTS.

29 HEAT TRACE CONNECT DETAIL

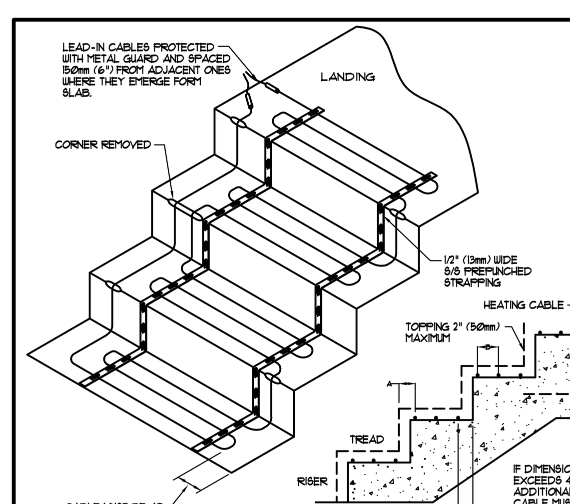

NOTES:
1. INSTALLATION TO BE COMPLETED IN ACCORDANCE WITH MANUFACTURER'S SPECIFICATIONS.
2. DO NOT SCALE DRAWINGS.
3. WHEN USING THE TWO-POUR METHOD, BASE SLAB MUST BE CLEAN, WETTED AND THEN COATED WITH A CEMENT SLURRY. SLURRY MUST NOT DRY BEFORE TOP CAP IS POURED.
4. CONTRACTORS NOTE: FOR PRODUCT AND COMPANY INFORMATION VISIT www.CADdetails.com/info (REFERENCE NUMBER 3408-084)

30 SURFACE SNOW MELTING - (PYROTENAX) STAIR INSTALLATION DETAIL

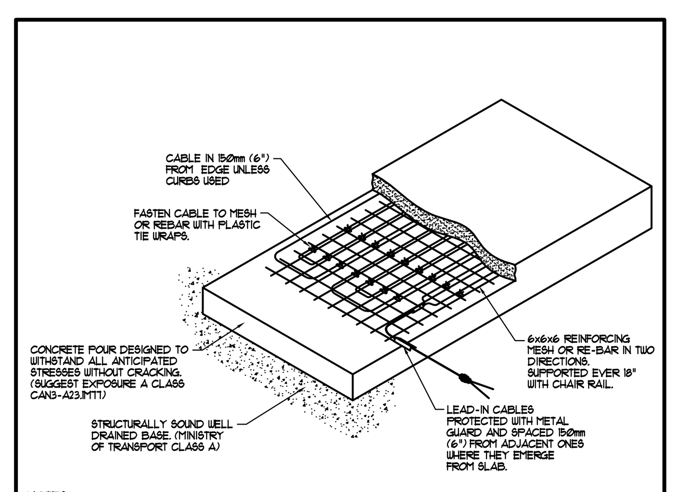

NOTES:
1. INSTALLATION TO BE COMPLETED IN ACCORDANCE WITH MANUFACTURER'S SPECIFICATIONS.
2. DO NOT SCALE DRAWINGS.
3. LEAD-IN CABLE SHOULD BE TERMINATED IN A JUNCTION BOX ABOVE GRADE LEVEL TO PREVENT MOISTURE FROM ENTERING FROM ENTERING THE BOX.
4. CARE MUST BE TAKEN NOT TO DAMAGE CABLE WITH RAKES, SHOVELS, WHEELBARROWS, ETC.
5. CONTROL JOINTS TO BE PLACED NO FURTHER THAN 20' IN ANY ONE DIRECTION.
6. CUT CONTROL JOINTS 1/8" WIDE AND 3/4" DEEP APPROX. 6 HOURS AFTER PLACING CONCRETE.
7. CONTRACTORS NOTE: FOR PRODUCT AND COMPANY INFORMATION VISIT www.CADdetails.com/info (REFERENCE NUMBER 3408-082)

31 SURFACE SNOW MELTING - (PYROTENAX) CONCRETE SINGLE POUR INSTALLATION DETAIL

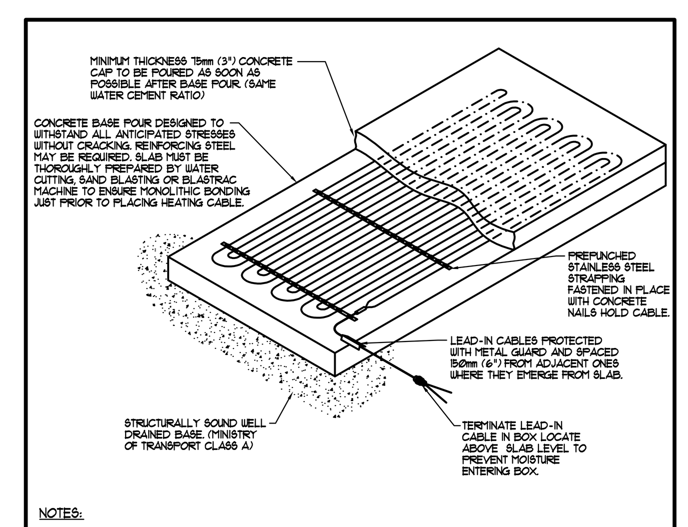

NOTES:
1. INSTALLATION TO BE COMPLETED IN ACCORDANCE WITH MANUFACTURER'S SPECIFICATIONS.
2. DO NOT SCALE DRAWINGS.
3. MAXIMUM SLAB AREA WITHOUT CONTROL OR EXPANSION JOINTS RECOMMENDED FOR A HEATING INSTALLATION 37 SQm (400 SQ. FT.), NO GREATER THAN 6m (20 FT.) IN ANY ONE DIRECTION.
4. CARE MUST BE TAKEN NOT TO DAMAGE CABLE WITH RAKES, SHOVELS, WHEELBARROWS, ETC.
5. CONTRACTORS NOTE: FOR PRODUCT AND COMPANY INFORMATION VISIT www.CADdetails.com/info REFERENCE NUMBER 3408-079)

32 SURFACE SNOW MELTING - (PYROTENAX) CONCRETE TWO POUR INSTALLATION DETAIL

ELECTRICAL LEGEND

LIGHTING

- FLUORESCENT LIGHT FIXTURE, TYPE AS INDICATED
- NIGHT LIGHT OR LIGHT CONNECTED TO EMERGENCY POWER
- CEILING MOUNTED/WALL MOUNTED LIGHT FIXTURE, INSCRIBED LETTER DENOTES TYPE
- POLE MOUNTED LIGHT FIXTURE, INSCRIBED LETTER DENOTES TYPE
- CAPPED CEILING LIGHT OUTLET
- TRACK LIGHT
- STRIP LIGHT
- UNDER CABINET FLUORESCENT LIGHT FIXTURE
- CEILING MOUNTED/WALL MOUNTED EXIT SIGN
- SINGLE/DUAL EMERGENCY LAMP REMOTE HEAD
- EMERGENCY BATTERY PACK
- PP — OCCUPANCY SENSOR POWER PACKS
- $/$/$, $3, $4, $P, $D — SINGLE/TWO/THREE POLE, SINGLE/TWO/THREE THROW TOGGLE SWITCH RESPECTIVELY, ('3','4','P','D' DENOTES 3-WAY,4-WAY,PILOT LIGHT, DIMMER SWITCHED LIGHT RESPECTIVELY)
- MASTER LIGHTING SHUT-OFF SWITCH
- SENSOR WALL SWITCH PIR, SELF POWERED
- OCCUPANCY SENSOR, CEILING MOUNTED

POWER

- REGULAR DUPLEX RECEPTACLE
- DUPLEX RECEPTACLE, GROUND FAULT INTERRUPT
- 5-20R T-SLOT DUPLEX RECEPTACLE
- SINGLE RECEPTACLE, TYPE AND CONFIGURATION AS SPECIFIED FOR DRYER
- CONNECTION FOR OVEN/COOKTOP
- ABOVE COUNTER DEVICE
- CEILING MOUNTED DEVICES
- FLOOR MOUNTED DEVICES
- DISCONNECT SWITCH, NON-FUSED
- DISCONNECT SWITCH, FUSED
- COMBINATION STARTER
- FRACTIONAL MOTOR/FAN DIRECT CONNECTION
- DIRECT CONNECTION, SINGLE PHASE
- DIRECT CONNECTION, THREE PHASE
- THERMOSTAT
- DS — DRYER SENSOR
- HEAT TRACE
- ELECTRICAL HEATER
- EP / SP — ELECTRICAL PANEL / SECURITY PANEL

TELECOMMUNICATION

- TV/CABLE OUTLET
- TELEPHONE OUTLET
- MP — TELEPHONE/TV CABLE (MULTI-PORT OUTLET)
- DATA OUTLET
- DATA/TELEPHONE OUTLET
- CB — IN SUITE TELECOMM. BOX C/W RECEPTACLE
- WFI — WIFI LOCATION
- MS / VC — MUSIC SPEAKER / VOLUME CONTROL
- RR — RADIO RECEIVER

SECURITY

- IC / ENT — INTERCOM / ENTERPHONE
- ICV — INTERCOM WITH CAMERA
- PB / PAR — PANIC BUTTON / PANIC INTERCOM STATION
- CR — CARD READER
- ARCA / RR — AUTOMATIC RELEASE CARD ACCESS/RADIO RECEIVER
- ES — ELECTRIC STRIKE
- ML — MAGLOCK
- DC / WC — DOOR CONTACT / WINDOW CONTACT
- DO — AUTOMATIC DOOR OPERATOR
- MD — MOTION DETECTOR
- PUSH BUTTON
- SECURITY CAMERA

LIFE SAFETY

- FIRE ALARM SMOKE DETECTOR
- A — SMOKE ALARM
- D — FIRE ALARM DUCT TYPE SMOKE DETECTOR
- FIRE ALARM HEAT DETECTOR
- H — FIXED TEMP. 88 °C DEGREE HEAT DETECTOR
- M — MOISTURE PROOF HEAT DETECTOR
- CO ALARM
- A — COMBINATION SMOKE & CO ALARM
- CO / NO — CO SENSOR / NO SENSOR
- FIRE ALARM MANUAL PULL STATION
- H — FIREFIGHTER'S HANDSET
- FIRE ALARM STROBE/HORN, WALL MTD.
- FIRE ALARM MINI-HORN, WALL MTD.
- FIRE ALARM SPEAKER/STROBE CEILING MTD.
- FIRE ALARM SPEAKER, CEILING MTD.
- FAAP — FIRE ALARM ANNUNCIATOR PANEL
- FACP — FIRE ALARM CONTROL PANEL

DATE	NO.	DESCRIPTION	BY
MM/DD/YY	1	ISSUED FOR ---	S.T.

MARK VOID ALL PRINTS DATED PREVIOUS TO FINAL DATE ABOVE

REVISIONS

CONTRACTOR MUST CHECK AND VERIFY ALL DIMENSIONS AND CONDITIONS ON THE JOB AND REPORT DISCREPANCIES TO THE ENGINEERS BEFORE PROCEEDING WITH THE WORK. THIS DRAWING IS THE PROPERTY OF THE ENGINEERS AND MUST BE RETURNED UPON COMPLETION OF THE WORK.

DRAWINGS ARE NOT TO BE SCALED

NOVA TREND ENGINEERING GROUP LTD

175 West Beaver Creek Road, Unit 31
Richmond Hill, Ontario L4B 3M1
Tel: 905 882-5445
Fax: 905 882-5447
Email: cad@novatrendeng.com

DRAWING TITLE:
ELECTRICAL DETAILS

PROJECT TITLE:
ALEXANDRA PARK

XXX
TORONTO ONTARIO

DRAWN BY:	CHECKED BY:	SCALE:
S.O.	S.T.	N.T.S.
DATE:	PROJECT NUMBER:	DRAWING NUMBER:
FEB, 13	1313	E-35 OF

Drawing name: \\CADSERVER\Current Dwg\13\1313 – Alexandra Park\DIV16\1313E– 35 (DETAILS).dwg Plotted: May 20, 2014 – 4:00pm