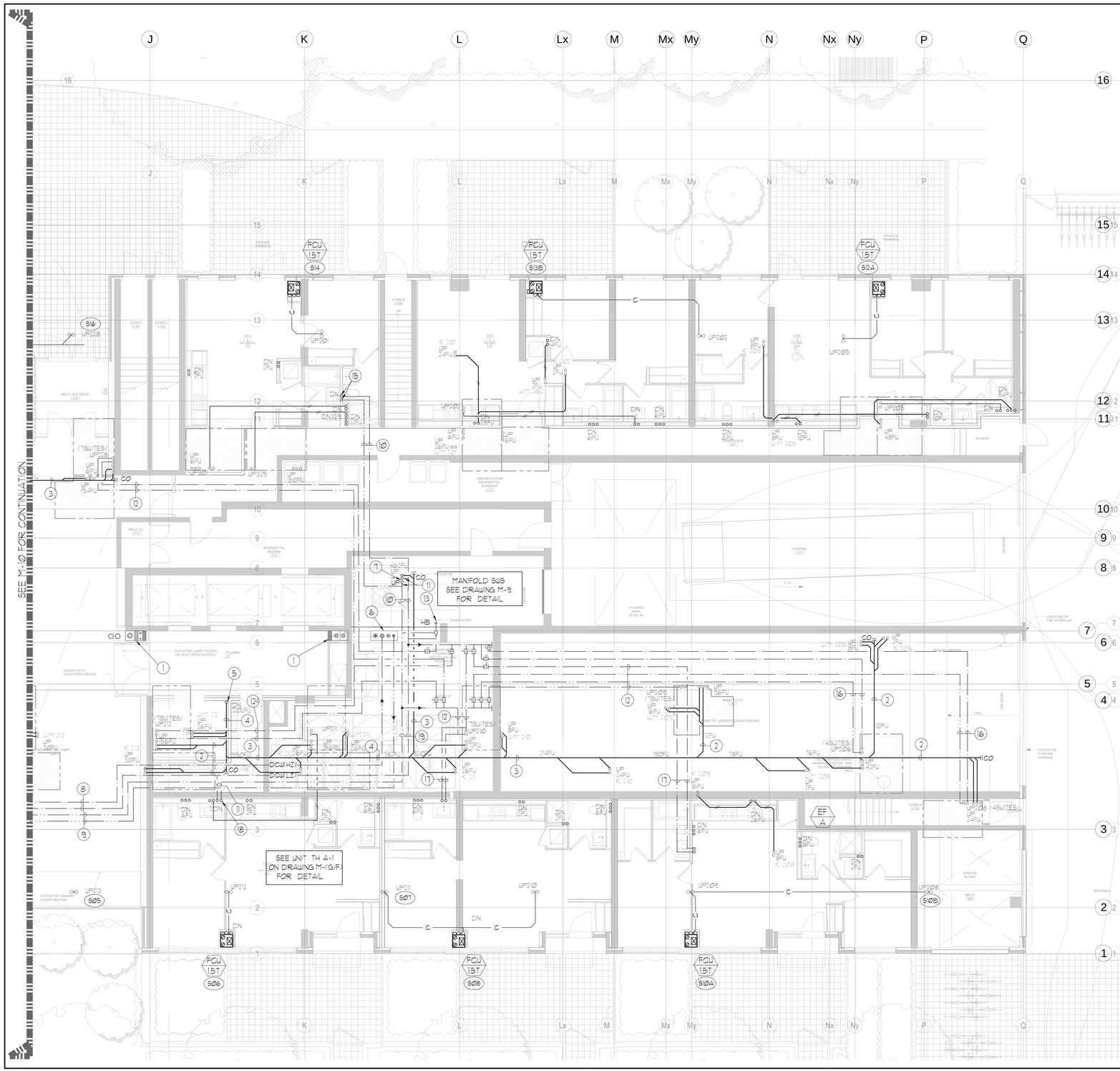

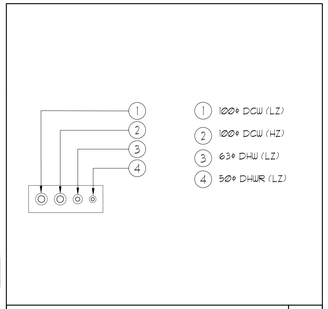

NORTH PIPE SHAFT 2: G/F. NTS

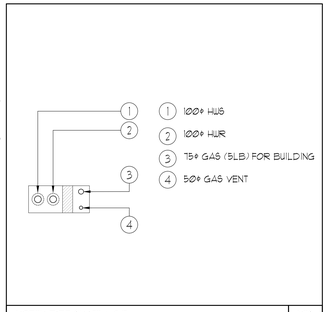

NORTH PIPE SHAFT 1: G/F. NTS

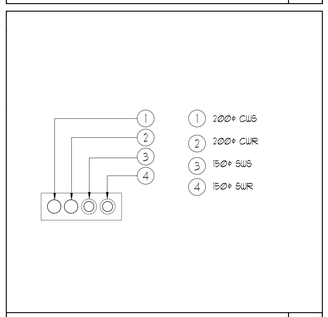

SOUTH PIPE SHAFT: G/F. NTS

REFER TO DWG. M-X FOR GENERAL AND ACOUSTIC NOTES

CLEAR FLOOR TO UNDERSLAB = 4050mm
CLEAR PRODUCT= 3000mm
COMPLETE DROP CEILING =1000mm FOR DUCT/PIPES
ROOF DRAINS & TERRACE DRAINS FROM 2/F

NOTES:

1. PIPE SHAFT - REFER TO PIPE RISER DETAIL ON THIS DRAWING FOR DETAILS.
2. 100ø SAN @ 1%.
3. 150ø SAN @ 1%.
4. 200ø SAN @ 1%.
5. 200ø SAN DOWN.
6. 100ø DCW (HZ) UP & 50ø DHWR FROM PIPE RISER ABOVE.
7. 50ø DCW & 38ø DHW UP.
8. 100ø DCW (LZ) & 100ø DCW (HZ)
9. 75ø DHW (LZ) & 50ø DHWR (LZ)
10. 63ø DCW & 50ø DHW.
11. 50ø DCW & 38ø DHW.
12. 38ø DCW & 32ø DHW.
13. 19ø DCW & DHW DOWN TO SERVE (1) HOSEBIB FOR GARBAGE ROOM.
14. 150ø SAN UP.
15. 63ø DCW & 50ø DHW DOWN.
16. 32ø DCW & 25ø DHW.
17. 19ø DCW & 19ø DHW.
18. 50ø DCW & 38ø DHW DOWN.
19. 100ø DCW & 75ø DHW.

LEGEND
MECHANICAL

SYMBOL	DESCRIPTION
	SUPPLY AIR DIFFUSER
	SUPPLY AIR TROFFER
	LINEAR SUPPLY DIFFUSER
T	THERMOSTAT
S	FAN SWITCH
	RETURN AIR GRILLE
	EXHAUST AIR GRILLE
	SUPPLY DUCT UP
	SUPPLY DUCT DOWN
	RETURN DUCT UP
	RETURN DUCT DOWN
	EXHAUST DUCT UP
	EXHAUST DUCT DOWN
FD	FIRE DAMPER
BD	BALANCING DAMPER
M	MOTORIZED DAMPER
MFD	MOTORIZED FIRE DAMPER
BDD	BACKDRAFT DAMPER
OBD	OPPOSED BLADE VOLPE CONTROL DAMPER CLOSING BUDRAY
	TURNING VANES
	FLEXIBLE CONNECTION
	ACOUSTIC INSULATION
XX	TYPE OF EQUIPMENT EQUIPMENT IDENTIFICATION
XX/XX	TYPE OF DIFFUSER ON GRILLE
XXX/XXX	TYPE OF DIFFUSER/ NECK SIZE
XXX/XXX	AIRFLOW/ OFF ON LINE
S, M	STARTER / 3 PHASE , 1 PHASE /
S	N-SITE ERV MASTER SWITCH
S	FAN SWITCH / N-SITE ERV OVERRIDE BUTTON
CO	CO SENSOR
G	GAS LINE
G	GAS METER
G	GAS COCK
PR	PRESSURE REDUCING VALVE
	SANITARY ABOVE GRADE
	SANITARY BELOW GRADE
	STORM ABOVE GRADE
	STORM BELOW GRADE
	DOMESTIC COLD WATER
	DOMESTIC HOT WATER
	DOMESTIC HOT WATER RECIRCULATION
	SANITARY VENT
	WATER METER
FD	FLOOR DRAIN
FFD	FLANGE FLOOR DRAIN
HD	HUB DRAIN
RD	ROOF DRAIN
SLD	SLAB DRAIN
AD	AREA DRAIN
BLAD	BI-LEVEL AREA DRAIN
CB	CATCH BASIN
	SANITARY TRAP
	ELBOW UP
	ELBOW DOWN
CO	WALL CLEANOUT
CO	FLOOR CLEANOUT
HB	HOSE BIBB
NFHB	NON-FREEZE HOSE BIBB
	GLOBE VALVE
	GATE VALVE
	BALL VALVE
	BUTTERFLY VALVE
	PRESSURE REDUCING VALVE
	CHECK VALVE
	CAP
CA	COMPRESSED AIR OUTLET
	BACKFLOW PREVENTER
	CIRCUIT BALANCING VALVE
	MULTIPLE PIPES / - DENOTES NO. OF PIPES
	TEMPERATURE SENSOR
	THERMOMETER
	2-WAY MODULATING VALVE
	3-WAY MODULATING VALVE
	10"x4"(D) THERMOWELL C/W (2) BUSHING & (2) PLUGS
XXX	FLOOR ELEVATION ABOVE LEVEL
XXX	FLOOR ELEVATION THIS LEVEL
XXX	HEADROOM (FLOOR TO U/S HEIGHT)

DATE	NO	DESCRIPTION	BY
07/10/14	2	RE-ISSUED FOR PERMIT	E.P.
05/09/14	1	ISSUED FOR PERMIT	E.P.

PLEASE VOID ALL PRINTS DATED PREVIOUS TO FINAL DATE ABOVE

REVISIONS

CONTRACTOR MUST CHECK AND VERIFY ALL DIMENSIONS AND CONDITIONS ON THE JOB AND REPORT DISCREPANCIES TO THE ENGINEERS BEFORE PROCEEDING WITH THE WORK. THIS DRAWING IS THE PROPERTY OF THE ENGINEER AND MUST BE RETURNED UPON COMPLETION OF THE WORK.

DRAWINGS ARE NOT TO BE SCALED

NOVA TREND ENGINEERING GROUP LTD

REGISTERED PROFESSIONAL ENGINEER 07/10/14 ERIC PUI KAI AN PROVINCE OF ONTARIO

175 West Beaver Creek Road, Unit 31
Richmond Hill, Ontario L4B 3M1
Tel: 905 882-5445
Fax: 905 882-5447
Email: cad@novatrendeng.com

DRAWING TITLE:
G/F NORTH
P&D LAYOUT

PROJECT TITLE:
ALEXANDRA PARK

XXX
TORONTO ONTARIO

DRAWN BY:	CHECKED BY:	SCALE:
G.S.	E.P.	1:50

DATE:	PROJECT NUMBER	DRAWING NUMBER
FEB. 13	1313	M-11 OF 39

Drawing name: \\CADSERVER\Current Dwg\1313\1313M - Alexandra Park\1313-M - 10 1100F PLAN -GSO.dwg & NORTH HVAC P&D LAYOUT.dwg Plotted: Jul 09, 2014 - 2:40pm