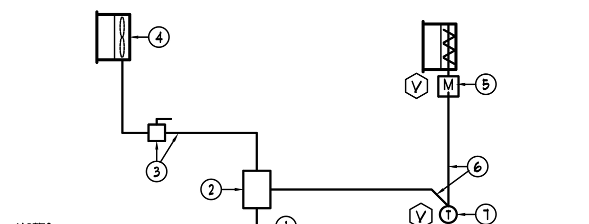

NOTES:
1. POWER WIRING AND CONDUIT BY DIV. 16
2. MAGNETIC COMBINATION STARTER WITH FUSES BY DIV. 15
3. POWER WIRING AND CONDUIT, SAFETY SWITCH BY DIV. 16
4. FAN BY DIV. 15
5. LINE VOLTAGE ACTUATOR BY DIV. 15
6. LINE VOLTAGE CONTROL WIRING AND CONDUIT BY DIV. 16
7. LINE VOLTAGE THERMOSTAT BY DIV. 15

CONTROL OPERATIONS:

1. LOCAL THERMOSTAT TO TURN ON/OFF EXHAUST FAN AND MOTORIZED DAMPER.

EXHAUST FAN CONTROL SCHEMATIC FOR UTILITY ROOMS
N.T.S.

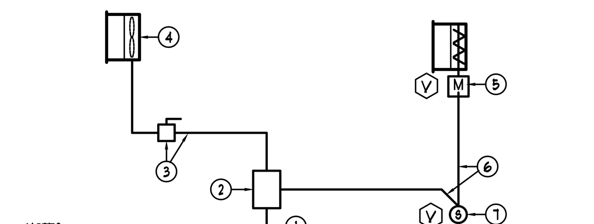

NOTES:
1. POWER WIRING AND CONDUIT BY DIV. 16
2. MAGNETIC COMBINATION STARTER WITH FUSES BY DIV. 15
3. POWER WIRING AND CONDUIT, SAFETY SWITCH BY DIV. 16
4. FAN BY DIV. 15
5. LINE VOLTAGE ACTUATOR BY DIV. 15
6. LINE VOLTAGE CONTROL WIRING AND CONDUIT BY DIV. 16
7. FAN SWITCH BY DIV. 15

CONTROL OPERATIONS:

1. LOCAL FAN SWITCH TO TURN ON/OFF EXHAUST FAN AND MOTORIZED DAMPER.

EXHAUST FAN CONTROL SCHEMATIC FOR STORAGE ROOMS
N.T.S.

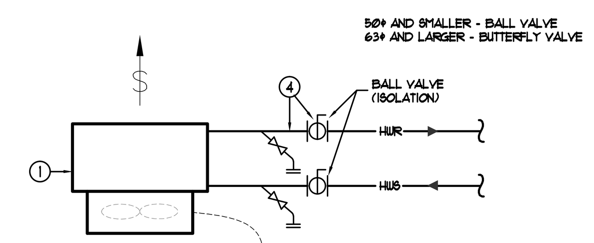

NOTES:
1. HEATER BY DIV. 15
2. LINE VOLTAGE CONTROL WIRING AND CONDUIT BY DIV. 16
3. THERMOSTAT BY DIV. 15
4. PIPING AND ASSOCIATED VALVES BY DIV. 15

CONTROL OPERATIONS:

1. LOCAL THERMOSTAT TO TURN ON/OFF HEATER.

UNIT HEATER CONTROL DETAIL
N.T.S.

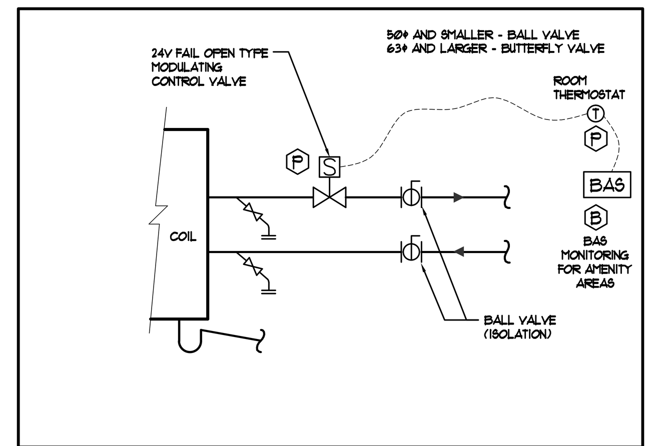

2-WAY VALVE PIPING ARRANGEMENTFOR 2-PIPE SYSTEM
N.T.S.

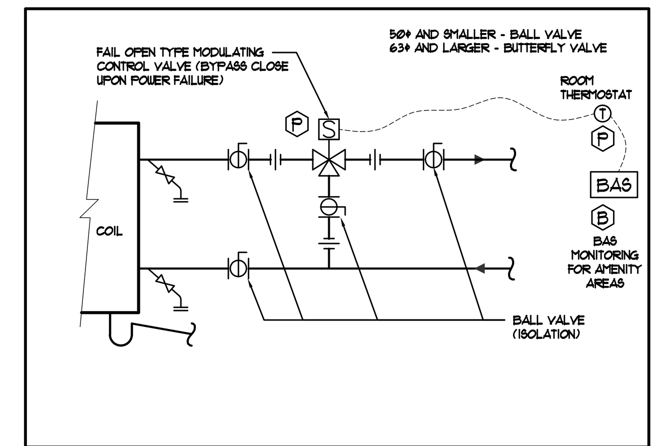

3-WAY VALVE PIPING ARRANGEMENT
N.T.S.

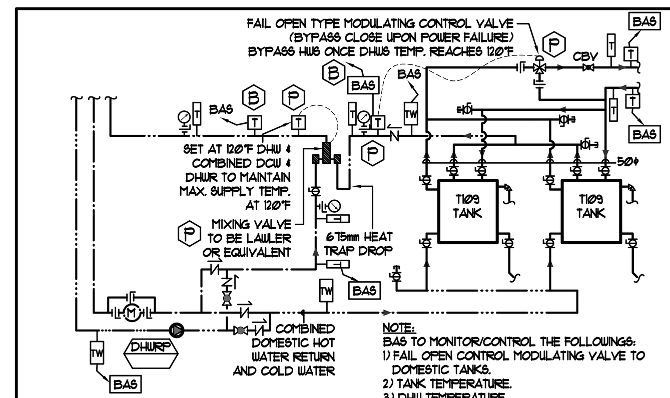

NOTE:
BAS TO MONITOR/CONTROL THE FOLLOWINGS:
1) FAIL OPEN CONTROL MODULATING VALVE TO DOMESTIC TANKS.
2) TANK TEMPERATURE.
3) DHW TEMPERATURE.
4) DHWR TEMPERATURE.
5) BAS TO RAMP UP BOILER TEMPERATURE WHEN DHW TEMPERATURE DROPS BELOW 120°F.

CONTROL POINT SCHEDULE	
DESCRIPTION	TYPE
DOMESTIC RECIRCULATION PUMP START/STOP	DO
DOMESTIC RECIRCULATION PUMP STATUS	DI
DOMESTIC TANK 1 TEMP	AI
DOMESTIC TANK 2 TEMP	AI
DISCHARGE DHW TEMP TANK 1	AI
DISCHARGE DHW TEMP TANK 2	AI
DISCHARGE DHW TEMP TANKS BEFORE TMV	AI
SUPPLY DHW TEMP TO BUILDING	AI
RETURN HW TEMP TO TANKS AFTER 3-WAY VALVE	AI
SUPPLY HW TEMP AFTER 3-WAY VALVE	AI
3-WAY MIXING VALVE	AO
DOMESTIC MIX RETURN TEMP	AI
DOMESTIC MAKE UP TEMP	AI

DOMESTIC HOT WATER TANK DETAIL (TURBOMAX)
N.T.S.

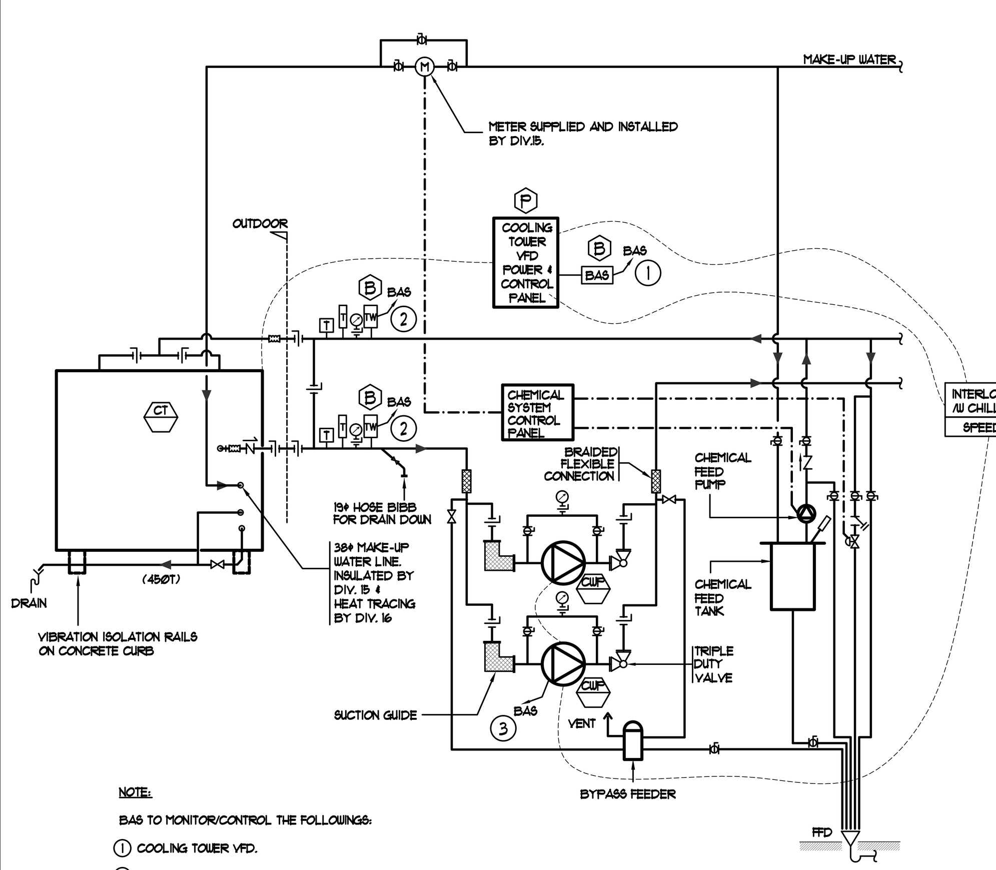

CONTROL POINT SCHEDULE	
DESCRIPTION	TYPE
COOLING TOWER (CONDENDER) SUPPLY TEMPERATURE	AI
COOLING TOWER (CONDENDER) RETURN TEMPERATURE	AI
CONDENSER PUMP 1 START/STOP	DO
CONDENSER PUMP 1 STATUS	DI
CONDENSER PUMP 2 START/STOP	DO
CONDENSER PUMP 2 STATUS	DI
VFD COOLING TOWER	FLN

NOTE:

BAS TO MONITOR/CONTROL THE FOLLOWINGS:
1. COOLING TOWER VFD.
2. CONDENSER WATER SUPPLY & RETURN TEMPERATURE.
3. PUMP STATUS.

RESIDENTIAL COOLING TOWER CONTROL SCHEMATIC
N.T.S.

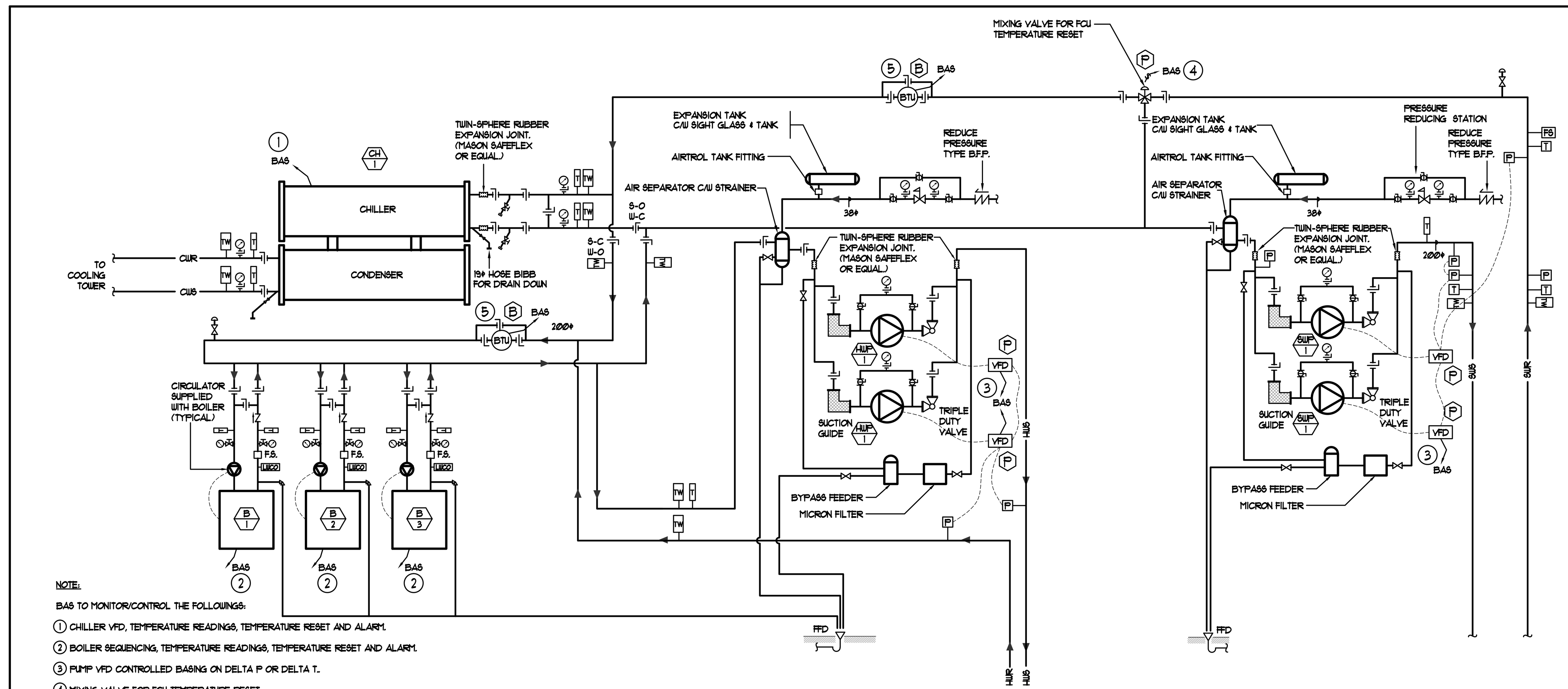

NOTE:

BAS TO MONITOR/CONTROL THE FOLLOWINGS:
1. CHILLER VFD, TEMPERATURE READINGS, TEMPERATURE RESET AND ALARM.
2. BOILER SEQUENCING, TEMPERATURE READINGS, TEMPERATURE RESET AND ALARM.
3. PUMP VFD CONTROLLED BASING ON DELTA P OR DELTA T..
4. MIXING VALVE FOR FCU TEMPERATURE RESET.
5. BTU METER.

CONTROL POINT SCHEDULE	
DESCRIPTION	TYPE
CHILLER STATUS	DI
CHILLER LOAD CONTROL	AO
CHILLER ENABLE	DO
CHILLED WATER SUPPLY TEMP SETPOINT RESET	AO
VFD SYSTEM WATER PUMPS	FLN
SYSTEM WATER SUPPLY PRESSURE	AI
SYSTEM WATER RETURN PRESSURE	AI
SYSTEM WATER SUPPLY TEMP	AI
SYSTEM WATER RETURN TEMP	AI
VFD HEATING WATER PUMPS	FLN
HEATING WATER SUPPLY PRESSURE	AI
HEATING WATER RETURN PRESSURE	AI
HEATING BOILER (1) ENABLE	DO
HEATING BOILER (1) STATUS	DI
HEATING BOILER (1) MODULATION	AO
CIRCULATION PUMP HEATING BOILER (1) START/STOP	DO
CIRCULATION PUMP HEATING BOILER (1) STATUS	DI
HEATING BOILER (2) ENABLE	DO
HEATING BOILER (2) STATUS	DI
HEATING BOILER (2) MODULATION	AO
CIRCULATION PUMP HEATING BOILER (2) START/STOP	DO
CIRCULATION PUMP HEATING BOILER (2) STATUS	DI
HEATING BOILER (3) ENABLE	DO
HEATING BOILER (3) STATUS	DI
HEATING BOILER (3) MODULATION	AO
CIRCULATION PUMP HEATING BOILER (3) START/STOP	DO
CIRCULATION PUMP HEATING BOILER (3) STATUS	DI
HEATING BOILER (4) ENABLE	DO
HEATING BOILER (4) STATUS	DI
HEATING BOILER (4) MODULATION	AO
CIRCULATION PUMP HEATING BOILER (4) START/STOP	DO
CIRCULATION PUMP HEATING BOILER (4) STATUS	DI
HEATING BOILER (1) HOT WATER SUPPLY TEMP	AI
HEATING BOILER (1) HOT WATER RETURN TEMP	AI

CONTROL POINT SCHEDULE	
DESCRIPTION	TYPE
HEATING BOILER (2) HOT WATER SUPPLY TEMP	AI
HEATING BOILER (2) HOT WATER RETURN TEMP	AI
HEATING BOILER (3) HOT WATER SUPPLY TEMP	AI
HEATING BOILER (3) HOT WATER RETURN TEMP	AI
HEATING BOILER (4) HOT WATER SUPPLY TEMP	AI
HEATING BOILER (4) HOT WATER RETURN TEMP	AI
HEATING BOILERS PRIMARY SUPPLY TEMP	AI
HEATING BOILERS PRIMARY RETURN TEMP	AI
SECONDARY HOT WATER/CHILLED WATER (SWS) SUPPLY TEMP	AI
SECONDARY HOT WATER/CHILLED WATER (SWS) RETURN TEMP	AI
PRIMARY HOT WATER/CHILLED WATER (SWS) SUPPLY TEMP	AI
PRIMARY HOT WATER/CHILLED WATER (SWS) RETURN TEMP	AI
3-WAY MIXING SYSTEM WATER VALVE (FCU RESET)	AO

RESIDENTIAL SYSTEM WATER CONTROL SCHEMATIC
N.T.S.

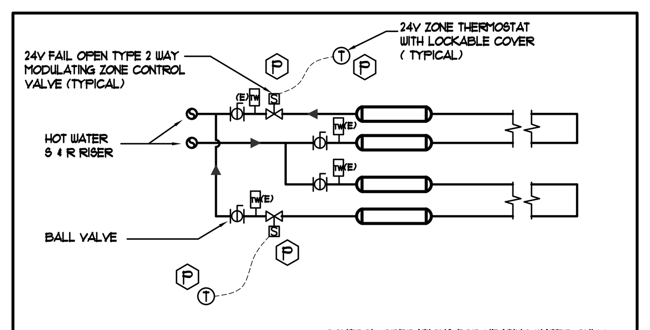

CONTROL OPERATIONS FOR HEATING WATER ONLY SYSTEM:

1. LOCAL THERMOSTAT TO TURN ON/OFF FAIL OPEN MODULATING VALVE.

FIN TUBE HEATING CONTROL DETAIL (HTG. WATER ONLY)
N.T.S.

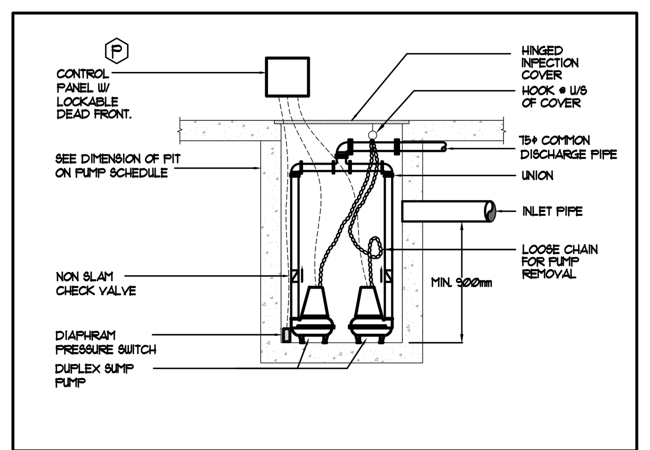

ELEVATOR SUMP PIT DETAIL
N.T.S.

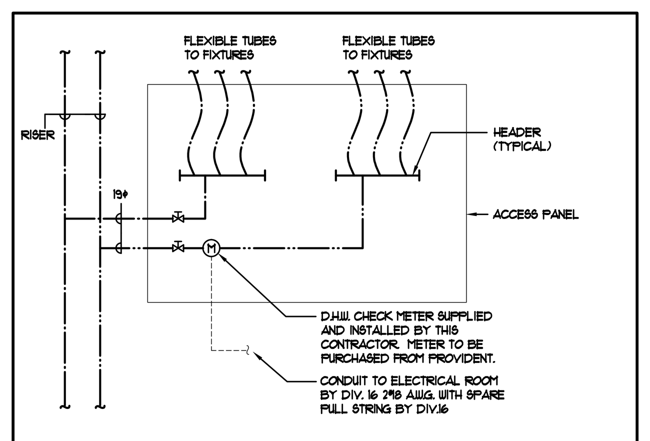

IN-SUITE D.H. & C.W. ARRANGEMENT
N.T.S.

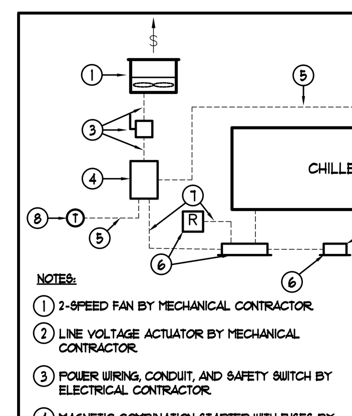

CONTROL OPERATIONS:

1. 2-SPEED FAN TO RUN IN LOW SPEED UPON SIGNAL FROM THE THERMOSTAT SET @ A TEMPERATURE SET POINT.

2. 2-SPEED FAN TO RUN IN HIGH SPEED UPON RECEIVING LEAKAGE SIGNAL FROM REFRIGERANT MONITORING SYSTEM. CHILLER TO SHUT DOWN.

NOTES:
1. 2-SPEED FAN BY MECHANICAL CONTRACTOR.
2. LINE VOLTAGE ACTUATOR BY MECHANICAL CONTRACTOR.
3. POWER WIRING, CONDUIT, AND SAFETY SWITCH BY ELECTRICAL CONTRACTOR.
4. MAGNETIC COMBINATION STARTER WITH FUSES BY MECHANICAL CONTRACTOR.
5. LINE VOLTAGE CONTROL WIRING AND CONDUIT BY ELECTRICAL CONTRACTOR.
6. REFRIGERANT MONITORING SYSTEM BY MECHANICAL CONTRACTOR.
7. LOW VOLTAGE WIRING BY MECHANICAL CONTRACTOR. CONDUIT BY ELECTRICAL CONTRACTOR.
8. LINE VOLTAGE THERMOSTAT SUPPLIED BY MECHANICAL CONTRACTOR.
9. REMOTE PANEL OUTSIDE OF CHILLER ROOM

CONTROL SCHEMATIC FOR CHILLER ROOM
N.T.S.

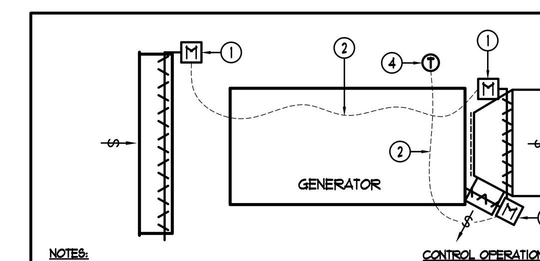

NOTES:
1. FAIL-OPEN TYPE LINE VOLTAGE ACTUATOR BY MECHANICAL CONTRACTOR. ELECTRICAL CONTRACTOR TO INTERLOCK WITH GENERATOR.
2. CONDUIT AND WIRING BY ELECTRICAL CONTRACTOR.
3. LINE VOLTAGE ACTUATOR BY MECHANICAL CONTRACTOR.
4. LINE VOLTAGE THERMOSTAT SUPPLIED BY MECHANICAL CONTRACTOR AND INSTALLED BY ELECTRICAL CONTRACTOR.

CONTROL OPERATIONS:

1. FAIL-OPEN TYPE INTAKE & EXHAUST MOTORIZED DAMPERS TO BE OPENED WITHIN 30 SEC. UPON ACTIVATION OF GENERATOR.

2. BYPASS MOTORIZED DAMPER CONNECTED TO REVERSE ACTING THERMOSTAT SET @ 70°F. DAMPER OPENS WHEN TEMPERATURE IS BELOW 70°F.

CONTROL SCHEMATIC FOR EMERGENCY GENERATOR ROOM
N.T.S.

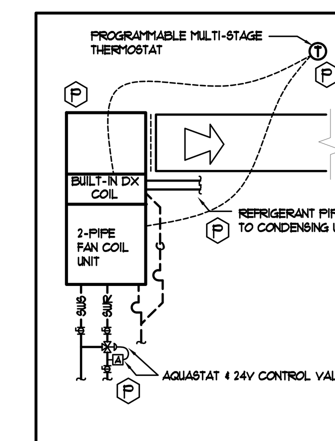

SEQUENCE OF OPERATIONS:

SUMMER (SYSTEM WATER IN COOLING MODE):
1. SWS & R WILL BE USED FOR COOLING.
2. DX COIL AND CONDENSING UNIT WILL BE DISABLED.
3. HEATING IS NOT AVAILABLE.

WINTER (SYSTEM WATER IN HEATING MODE):
1. WHEN THERMOSTAT CALLS FOR HEATING, SWS & R WILL BE USED FOR HEATING. DX COIL AND CONDENSING UNIT WILL BE SHUT OFF.
2. WHEN THERMOSTAT CALLS FOR COOLING, SYSTEM WATER CONTROL VALVE WILL SHUT OFF SYSTEM WATER (HEATING WATER) COIL. DX COIL AND CONDENSING UNIT WILL BE ACTIVATED TO PROVIDE COOLING.

NOTES:
CONTRACTOR TO SUPPLY & INSTALL RELAY(S) REQUIRED FOR THE ABOVE OPERATIONS.
CONTRACTOR TO SUPPLY & INSTALLED TRANSFORMER FOR CONTROL VALVE IF REQUIRED.

2-STAGE COOILING DETAILS FOR FCU /w DX COIL
N.T.S.

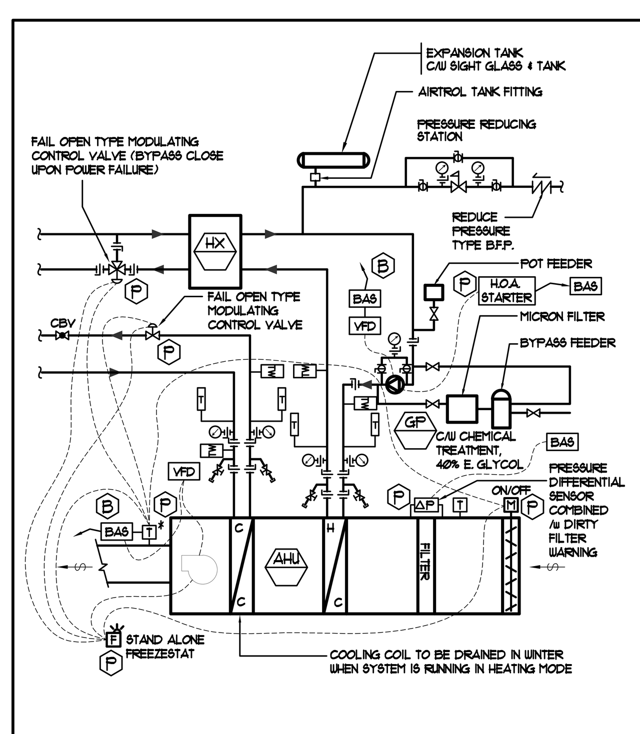

CONTROL POINT SCHEDULE	
DESCRIPTION	TYPE
SUPPLY TEMP TO HX	AI
RETURN TEMP TO HX	AI
SUPPLY TEMP FROM HX TO HW COIL OF AHU	AI
RETURN TEMP FROM HX TO HW COIL OF AHU	AI
3-WAY MIXING HOT WATER VALVE BEFORE HX	AO
VFD GLYCOL BOOSTER PUMP	FLN
2-WAY SYSTEM WATER VALVE	AO
SUPPLY TEMP TO SW COIL	AI
RETURN TEMP TO SW COIL	AI
OUTSIDE AIR DAMPER AHU	DO
OUTSIDE AIR DAMPER STATUS AHU	DI
FILTER DIFFERENTIAL PRESSURE AHU	AI
INLET AIR TEMP AHU	AI
SUPPLY AIR TEMP AHU	AI
VFD SUPPLY FAN AHU	FLN

NOTE:

BAS TO MONITOR/CONTROL THE FOLLOWINGS:

1) TEMPERATURE SENSOR (*) TO CONTROL MODULATING VALVE. IT ALSO ACT AS FREEZE PROTECTION. WHEN SUPPLY TEMPERATURE DROPS BELOW 45°, CONTROL SYSTEM WILL CLOSE BOTH FANS AND ZERO LEAKAGE DAMPER. ALARM WILL ALSO BE SENT TO MAINTENANCE CONTRACTOR.

2) DELTA P ACROSS FILTER.

3) VFD ON SUPPLY/EXHAUST FAN INCLUDING TIME SCHEDULING START, STOP AND ALARM.

AHU TO BE C/W FREEZESTAT WITH WARNING LIGHT. WHEN SUPPLY TEMPERATURE BELOW 40° IS DETECTED BY THE TEMPERATURE SENSOR, SUPPLY FAN WILL SHUT DOWN, INTAKE DAMPER WILL BE CLOSED AND WARNING LIGHT WILL LIGHT UP. THIS FREEZESTAT AND CONTROLS WILL BE PROVIDED BY THE PLUMBING CONTRACTOR AND WILL BE USED AS A BACKUP FREEZE PROTECTION OF THE BAS FREEZE PROTECTION CONTROL.

NON-HEAT RECOVERY AHU CONTROL DETAIL
N.T.S.

GENERAL NOTES:

CONTRACTOR TO PROVIDE LOCAL CONTROLLER TO HAVE SYSTEM FULLY FUNCTIONAL AND TESTED PRIOR TO THE OCCUPANCY. ALL FRESH AIR SYSTEM TO BE COMPLETED WITH LOCAL FREEZE PROTECTION THAT WILL SHUT DOWN FAN AND FRESH AIR MOTORIZED DAMPER WHEN PRESET MINIMUM AIR TEMPERATURE IS REACHED. CONTRACTOR TO SUBMIT SHOP DRAWING TO BOTH ENGINEER AND PROVIDENT FOR APPROVAL. LOCAL CONTROLLER THAT NEEDS TO BE INTERFACED WITH BAS SHALL BE SIEMENS OR EQUAL AND SUBJECT TO PROVIDENT'S APPROVAL.

DATE	NO.	DESCRIPTION	BY
04/21/15	4	ISSUED FOR CITY COMMENTS	E.P.
09/23/14	3	ISSUED FOR TENDER	E.P.
07/10/14	2	RE-ISSUED FOR PERMIT	E.P.
05/30/14	1	ISSUED FOR PERMIT	E.P.

MARK VOID ALL PRINTS DATED PREVIOUS TO FINAL DATE ABOVE

REVISIONS

CONTRACTOR MUST CHECK AND VERIFY ALL DIMENSIONS AND CONDITIONS ON THE JOB AND REPORT DISCREPANCIES TO THE ENGINEERS BEFORE PROCEEDING WITH THE WORK. THIS DRAWING IS THE PROPERTY OF THE ENGINEERS AND MUST BE RETURNED UPON COMPLETION OF THE WORK.

DRAWINGS ARE NOT TO BE SCALED

NOVA TREND ENGINEERING GROUP LTD

175 West Beaver Creek Road, Unit 31
Richmond Hill, Ontario L4B 3M1
Tel: 905 882-5445
Fax: 905 882-5447

DRAWING TITLE:
CONTROL DETAILS DRAWING

PROJECT TITLE:
SQ ALEXANDRA PARK
BLOCK 11
38 CAMERON STREET
TORONTO ONTARIO

DRAWN BY:	CHECKED BY:	SCALE:
G.S.	E.P.	N.T.S.
DATE: FEB, 13	PROJECT NUMBER: 1313	DRAWING NUMBER: M-42 OF 43