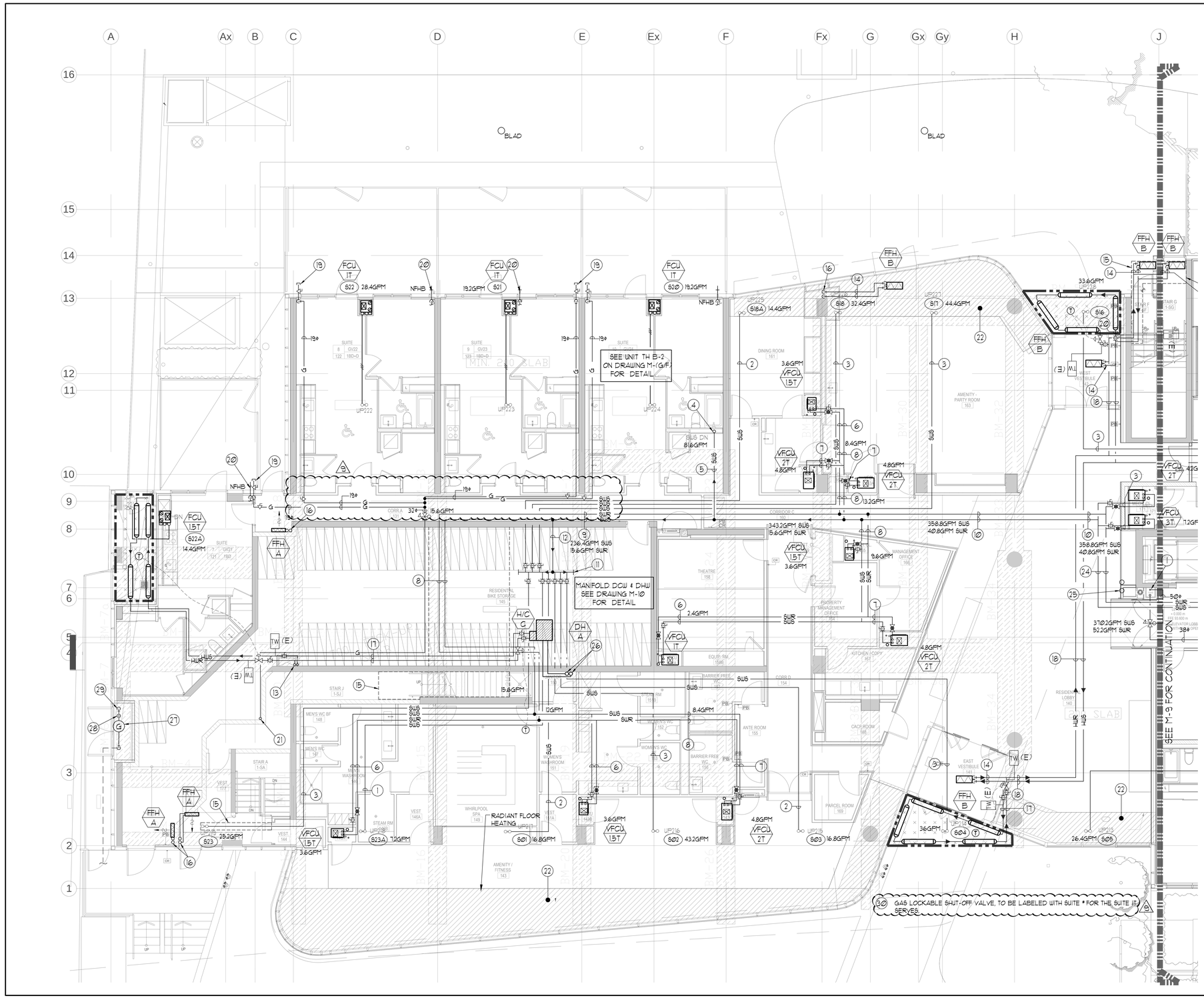

REFER TO DWG. M-6 FOR GENERAL NOTES AND M-9 ACOUSTIC NOTES

CLEAR FLOOR TO UNDERSLAB = 4050mm
CLEAR FROOUCT= 3000mm
COMPLETE DROP CEILING =1000mm FOR DUCT/PIPES
ROOF DRAINS & TERRACE DRAINS FROM 2/F

NOTES:

1. 25ø SWS.
2. 32ø SWS.
3. 50ø SWS.
4. 63ø SWS TO BELOW.
5. 63ø SWS.
6. 19ø SWS & 19ø SWR.
7. 25ø SWS & 25ø SWR.
8. 32ø SWS & 32ø SWR.
9. 100ø SWS & 32ø SWR.
10. 100ø SWS & 50ø SWR.
11. SWS MANIFOLD A, SEE SWS MANIFOLD A DETAIL ON THIS DRAWING.
12. 100ø SWS.
13. 32ø HWS & R FROM BELOW.
14. 19ø HWS & R.
15. 2Hr FIRE RATED ENCLOSURE. FIRE RATED ENCLOSURE BY OTHERS.
16. 19ø HWS & R FROM BELOW.
17. 32ø HWS & R.
18. 38ø HWS & R.
19. 19ø GAS PIPE c/w VALVE AND CAP FOR BBQ.
20. 19ø DCW FOR NFHB TO BE CONNECTED TO SUITE'S MAIN DCW LINE.
21. 13ø GAS BLB GAS DOWN.
22. RADIANT INFLOOR HEATING REFER TO DWG M-41 FOR DETAILS.
23. FOR FUTURE USE.
24. 100ø SWS & 63ø SWR.
25. 150ø CWS & R FROM ABOVE.
26. REFRIGERANT PIPES FROM DH-A TO CONDENSING UNIT ON P-1. PIPE SIZING AND INSTALLATION AS PER MANUFACTURER'S RECOMMENDATIONS.
27. INCOMING GAS STATION C/W 5 LB. REGULATOR AND METERS BY ENBRIDGE.
    APPROX. BUILDING LOAD= 12,000 CFH
    APPROX. EMERGENCY GENERATOR = 2,700 CFH
    63ø (5 LB.) FOR BUILDING AND 32ø (5 LB.) FOR GENERATOR DOWN TO P-1.
    PROVIDE LABEL ON EMERGENCY GENERATOR SHUT-OFF VALVE:
    "EMERGENCY GENERATOR SUPPLY - DO NOT CLOSE".
    SEE "ENBRIDGE GAS METER/REGULATING STATION DETAIL" ON THIS DRAWING FOR DETAIL.
28. 63ø 5LB GAS PIPE FROM METER ASSEMBLY DOWN, TO SERVE BUILDING.
29. 32ø 5LB GAS PIPE FROM METER ASSEMBLY ABOVE, TO SERVE EMERGENCY GENERATOR.

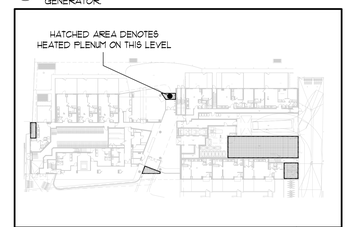

GROUND FLOOR HEATED PLENUM — N.T.S.

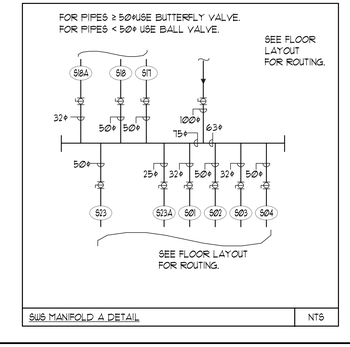

SWS MANIFOLD A DETAIL — NTS

LEGEND MECHANICAL

SYMBOL	DESCRIPTION
	SUPPLY AIR DIFFUSER
	SUPPLY AIR TROFFER
	LINEAR SUPPLY DIFFUSER
T	THERMOSTAT
S	FAN SWITCH
	RETURN AIR GRILLE
	EXHAUST AIR GRILLE
	SUPPLY DUCT UP
	SUPPLY DUCT DOWN
	RETURN DUCT UP
	RETURN DUCT DOWN
	EXHAUST DUCT UP
	EXHAUST DUCT DOWN
FD	FIRE DAMPER
BD	BALANCING DAMPER
MD	MOTORIZED DAMPER
MFD	MOTORIZED FIRE DAMPER
BDD	BACKDRAFT DAMPER
OBD	OPPOSED BLADE VOLUME CONTROL DAMPER C/W LOCKING QUADRANT
	TURNING VANES
	FLEXIBLE CONNECTION
	ACOUSTIC INSULATION
	TYPE OF EQUIPMENT / EQUIPMENT IDENTIFICATION
	TYPE OF DIFFUSER OR GRILLE / GRILLE SIZE OR DIFFUSER NECK SIZE / AIRFLOW (CFM OR L/S)
	STARTER (3 PHASE / 1 PHASE)
S	IN-SUITE ERV MASTER SWITCH
S	FAN SWITCH / IN-SUITE ERV OVERRIDE BUTTON
CO	CO SENSOR
	GAS LINE
	GAS METER
	GAS COCK
	PRESSURE REDUCING VALVE
	SANITARY ABOVE GRADE
	SANITARY BELOW GRADE
	STORM ABOVE GRADE
	STORM BELOW GRADE
	DOMESTIC COLD WATER
	DOMESTIC HOT WATER
	DOMESTIC HOT WATER RECIRCULATION
	SANITARY VENT
	WATER METER
FD	FLOOR DRAIN
FFD	FUNNEL FLOOR DRAIN
HD	HUB DRAIN
RD	ROOF DRAIN
RLD	RLAB DRAIN
AD	AREA DRAIN
BLAD	BI-LEVEL AREA DRAIN
CB	CATCH BASIN
	SANITARY TRAP
	ELBOW UP
	ELBOW DOWN
CO	WALL CLEANOUT
CO	FLOOR CLEANOUT
HB	HOSE BIBB
NFHB	NON-FREEZE HOSE BIBB
	GLOBE VALVE
	GATE VALVE
	BALL VALVE
	BUTTERFLY VALVE
	PRESSURE REDUCING VALVE
	CHECK VALVE
	CAP
	COMPRESSED AIR OUTLET
	BACKFLOW PREVENTER
	CIRCUIT BALANCING VALVE
	MULTIPLE PIPES / / - DENOTES NO. OF PIPES
T	TEMPERATURE SENSOR
T	THERMOMETER
	2-WAY MODULATING VALVE
	3-WAY MODULATING VALVE
	1/2"x4"(D) THERMOWELL C/W 1/2" BUSHING & 1/2" PLUG
	FLOOR ELEVATION ABOVE LEVEL
	FLOOR ELEVATION THIS LEVEL
	HEADROOM (FLOOR TO U/S HEIGHT)

DATE	NO.	DESCRIPTION	BY
12/06/13	13	ISSUED FOR SITE INSTRUCTION M-6	E.P.
29/05/13	12	ISSUED FOR SITE INSTRUCTION M-1-1	E.P.
29/04/13	11	ISSUED FOR SITE INSTRUCTION M-8	E.P.
26/03/13	10	ISSUED FOR SITE INSTRUCTION M-4	E.P.
28/01/13	9	ISSUED FOR CITY COMMENTS	E.P.
20/11/12	8	ISSUED FOR SITE INSTRUCTION M-1	E.P.
29/03/12	7	ISSUED FOR TENDER	E.P.
27/10/11	2	RE-ISSUED FOR PERMIT	E.P.
28/10/10	1	ISSUED FOR PERMIT	E.P.

THINK: VOID ALL PRINTS DATED PREVIOUS TO FINAL DATE ABOVE

REVISIONS

CONTRACTOR MUST CHECK AND VERIFY ALL DIMENSIONS AND CONDITIONS ON THE JOB AND REPORT ANY ERRORS AND OMISSIONS BEFORE PROCEEDING WITH THE WORK. THIS DRAWING IS THE PROPERTY OF THE ENGINEERS AND MUST BE RETURNED UPON COMPLETION OF THE WORK.

DRAWINGS ARE NOT TO BE SCALED

NOVA TREND ENGINEERING GROUP LTD.
175 West Beaver Creek Road, Unit 31
Richmond Hill, Ontario L4B 3M1
Tel: 905 882-5445
Fax: 905 882-9447

DRAWING TITLE:
G/F SOUTH
HVAC PIPING LAYOUT

PROJECT TITLE:
SQ ALEXANDRA PARK
BLOCK II
38 CAMERON STREET
TORONTO ONTARIO

DRAWN BY:	CHECKED BY:	SCALE:
G.S.	E.P.	1:50
DATE: FEB. 13	PROJECT NUMBER: 1313	DRAWING NUMBER: M-8 OF 43