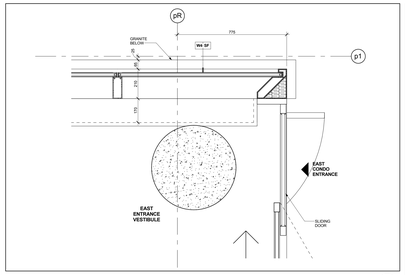

Curtain Wall & Sliding Door @ East Entrance Vestibule 14 A7-21
Scale: 1 : 10

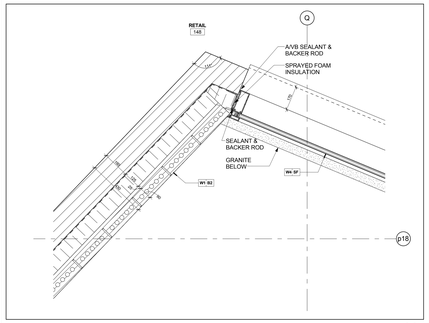

Curtain Wall & Brick Veneer Wall @ Retail @ Level 1 16 A7-21
Scale: 1 : 10

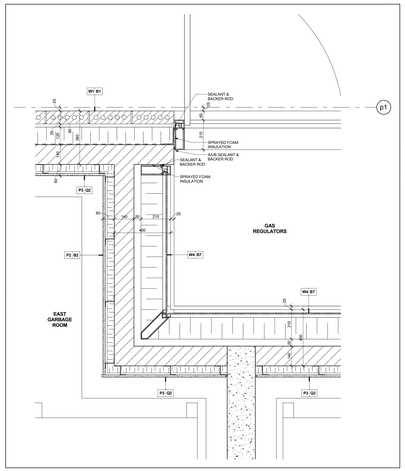

Curtain Wall @ Gas Regulator Alcove @ Level 1 13 A7-21
Scale: 1 : 10

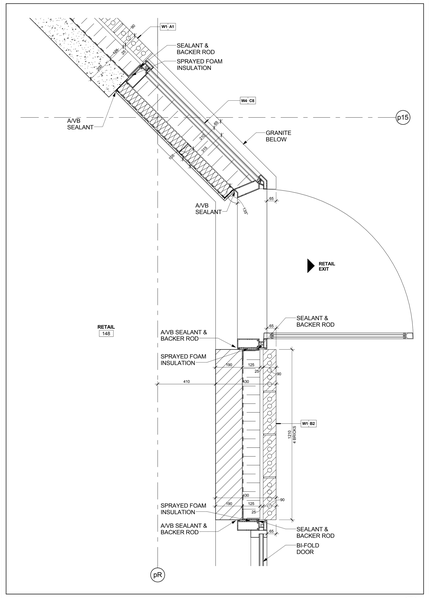

Curtain Wall & Brick Veneer Wall @ Retail @ Level 1 15 A7-21
Scale: 1 : 10

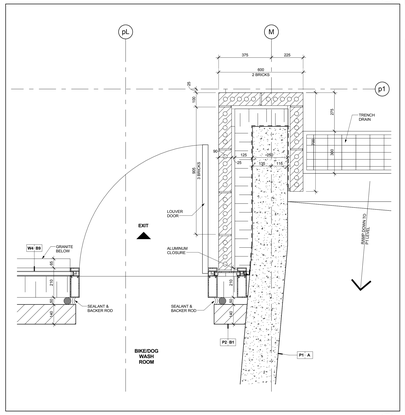

Curtain Wall & Brick Veneer Wall @ Level 1 12 A7-21
Scale: 1 : 10

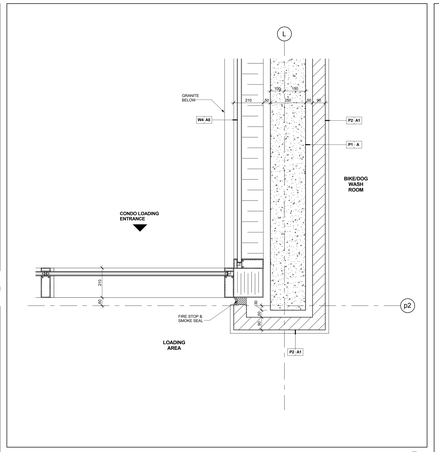

Curtain Wall @ Loading Area @ Level 1 11 A7-21
Scale: 1 : 10

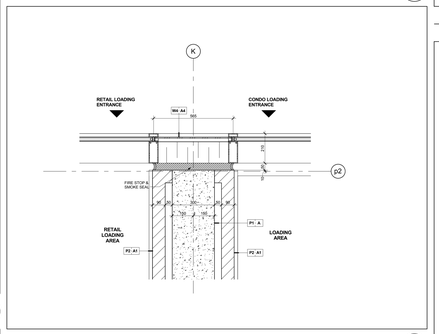

Concrete Wall @ Curtain Wall @ Loading Area @ Level 1 10 A7-21
Scale: 1 : 10

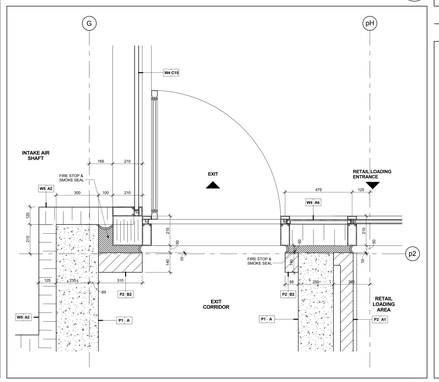

Metal Louver @ Intake Air Shaft @ Level 1 9 A7-21
Scale: 1 : 10

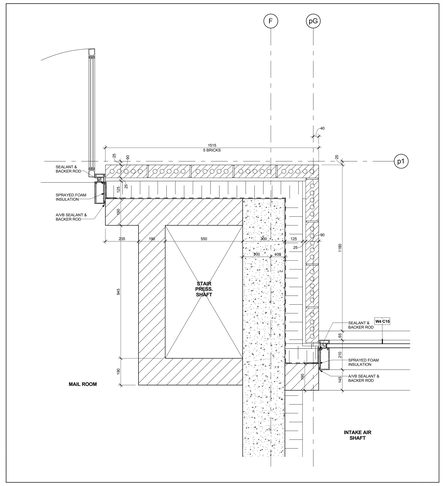

Brick Veneer Wall & Metal Louver @ Intake Air Shaft @ Level 1 8 A7-21
Scale: 1 : 10

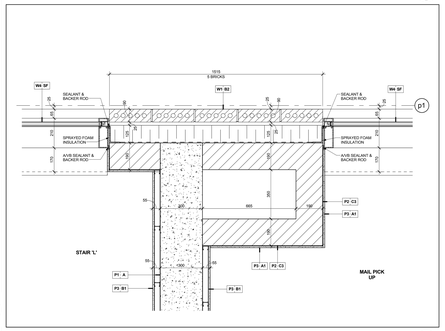

Concrete Wall @ Brick Veneer Wall @ Level 1 7 A7-21
Scale: 1 : 10

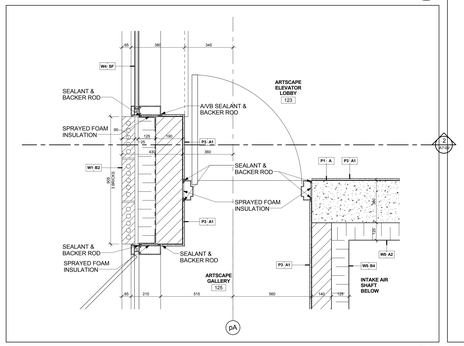

Concrete Wall @ Brick Veneer Wall @ Level 1 6 A7-21
Scale: 1 : 10

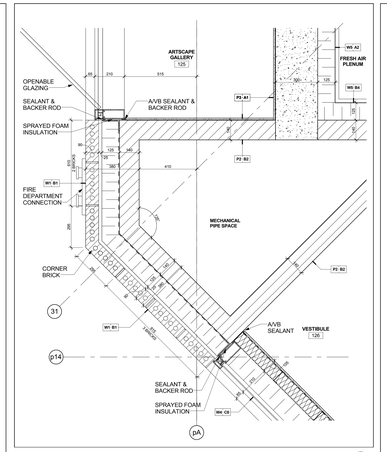

Curtain Wall @ Brick Veneer Wall @ Level 1 5 A7-21
Scale: 1 : 10

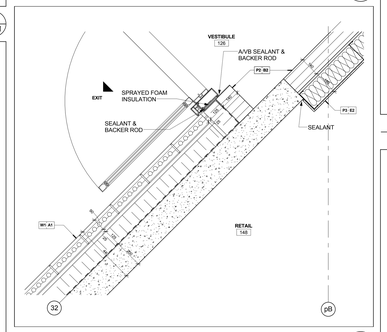

Swing Door @ Brick Veneer Wall with Structural Concrete @ Level 1 4 A7-21
Scale: 1 : 10

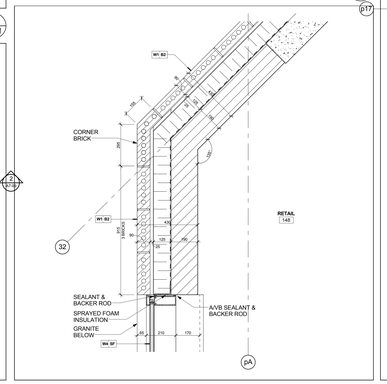

Curtain Wall @ Brick Veneer Wall @ Level 1 3 A7-21
Scale: 1 : 10

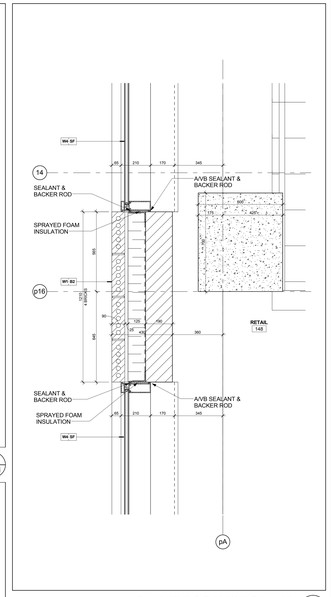

Curtain Wall @ Brick Wall @ Level 1 2 A7-21
Scale: 1 : 10

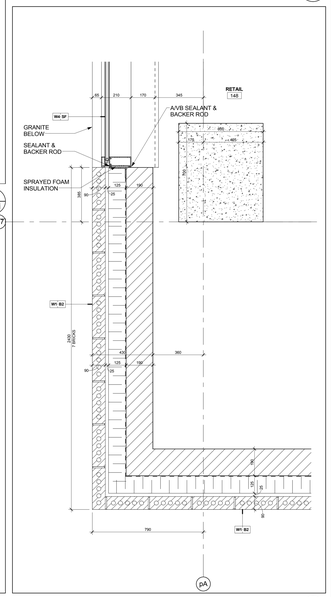

Curtain Wall @ Brick Veneer Wall @ Level 1 1 A7-21
Scale: 1 : 10

Contractor Must Check And Verify All Dimensions On The Job.

Do Not Scale The Drawings.

All Drawings, Specifications And Related Documents Are The Copyright Of The Architect And Must Be Returned Upon Request.

Reproduction Of Drawings, Specifications And Related Documents In Part Or Whole Is Forbidden Without The Architects Written Permission.

The Drawing Is Not To Be Used For Construction Until Signed By The Architect.

Date: October 15, 2015

Tender

KIRKOR ARCHITECTS + PLANNERS
20 Martin Ross Avenue, Toronto, Ontario, M3J 2K8
Tel (416) 665-6565, Fax (416) 665-1234, www.kirkorarchitects.com

No.	Revision	Date

No.	Issued For	Date
1	Tender	Oct. 15, 2015

AQUAVISTA
AT BAYSIDE TORONTO

Drawing Title
Plan Details

Hines TRIDEL

Project
AQUAVISTA
Block 3 - R3 & R4
263 Queens Quay East
Toronto, ON

Scale 1 : 10
Drawn by S.D.
Checked by C.A.
Project No. 13148
Date October 15, 2015
Drawing No. A7-21

Plot Date: 10/14/2015 12:44:13 PM File Path: C:\Users\rmorris\Documents\Revit 2015 Working Files\13148R20-Model-Building R3-R4_rmorris (A7-21).rvt