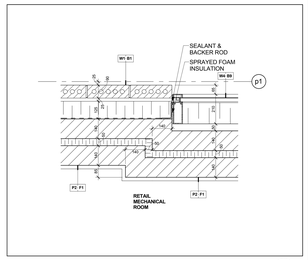

Conc. Block Acoustic Wall @ Mech. Rm. @ Level 1 Mezz. 4 A7-22

Scale: 1 : 10

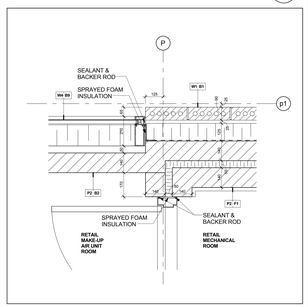

Conc. Block Acoustic Wall @ Mech. Rm. @ Level 1 Mezz. 3 A7-22

Scale: 1 : 10

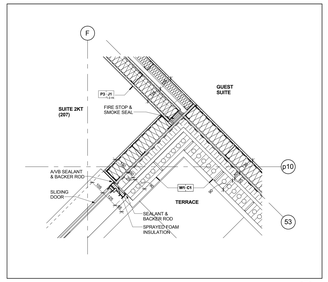

Suite Demising (M/ Studs) @ B/ Veneer Wall @ Terr. @ Level 2 6 A7-22

Scale: 1 : 10

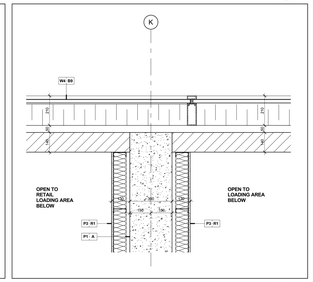

Conc. Demising Wall @ Curtain Wall @ Level 1 Mezz. 2 A7-22

Scale: 1 : 10

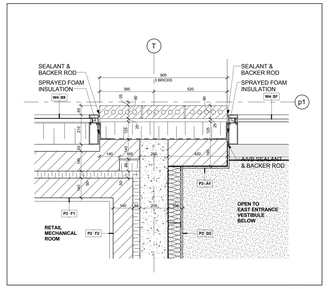

Conc. Block Acoustic Wall @ Mech. Rm. @ Level 1 Mezz. 5 A7-22

Scale: 1 : 10

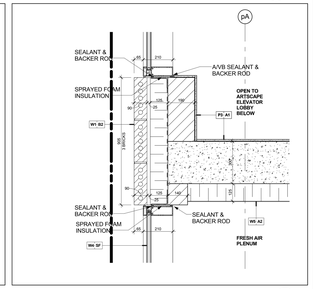

Concrete Wall @ Brick Veneer Wall @ Level 1 Mezz. 1 A7-22

Scale: 1 : 10

Contractor Must Check And Verify All Dimensions On The Job.

Do Not Scale The Drawings.

All Drawings, Specifications And Related Documents Are The Copyright Of The Architect And Must Be Returned Upon Request.

Reproduction Of Drawings, Specifications And Related Documents In Part Or Whole Is Forbidden Without The Architects Written Permission.

The Drawing Is Not To Be Used For Construction Until Signed By The Architect.

Date: **October 15, 2015**

Tender

KIRKOR ARCHITECTS + PLANNERS
20 Martin Ross Avenue, Toronto, Ontario, M3J 2K8
TX1 (416) 665-6065, FX1 (416) 665-1234, www.kirkorarchitects.com

No.	Revision	Date

No.	Issued For	Date
1	Tender	Oct. 15, 2015

AQUAVISTA
AT BAYSIDE TORONTO

Drawing Title

Plan Details

Project

Hines TRIDEL
AQUAVISTA
Block 3 - R3 & R4
263 Queens Quay East
Toronto, ON

Scale: 1 : 10

Drawn by: S.D.

Checked by: C.A.

Project No.: 13148

Date: October 15, 2015

Drawing No.: A7-22

Plot Date: 10/14/2015 12:44:23 PM File Path: C:\Users\rmonis\Documents\Revit 2015 Working Files\13148P20-Model-Building R3-R4_rmonis (A27).rvt