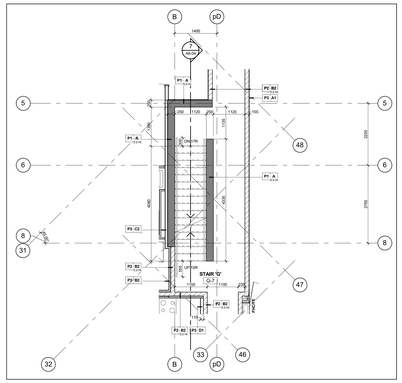

Stair 'G' - Stair Plan - Level 7 (16 / A6-03)
Scale: 1 : 50

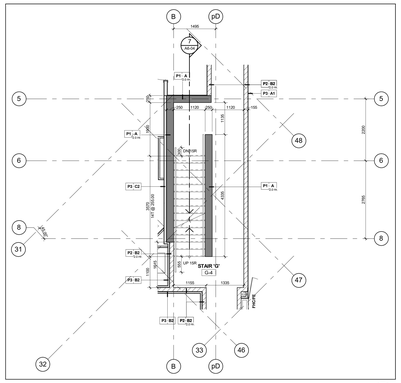

Stair 'G' - Stair Plan - Level 4 (13 / A6-03)
Scale: 1 : 50

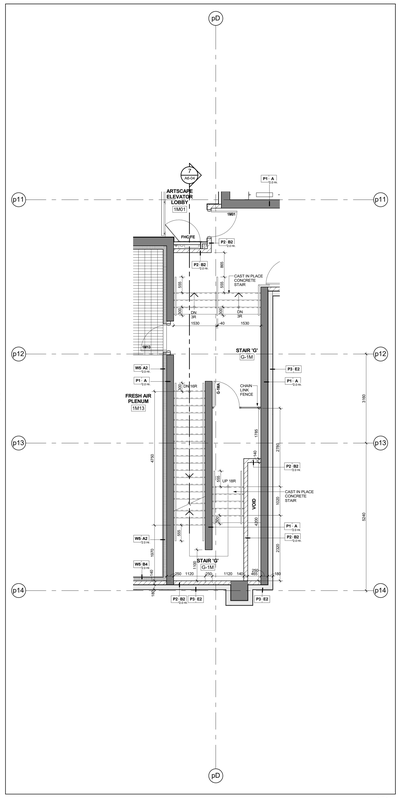

Stair 'G' - Stair Plan - Level 1 Mezzanine (10 / A6-03)
Scale: 1 : 50

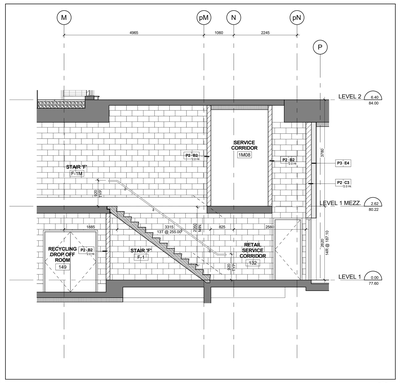

Stair 'F' - Stair Section Levels 1 - 2 (8 / A6-03)
Scale: 1 : 50

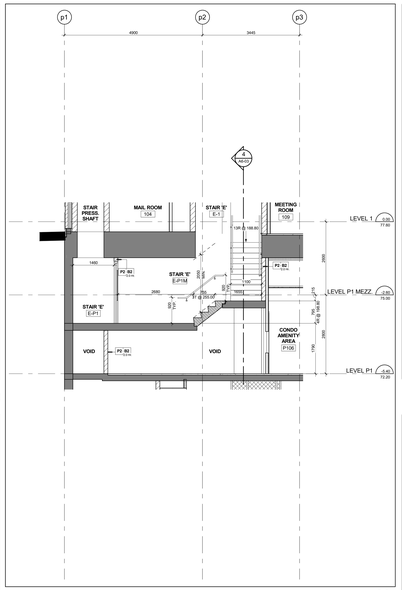

Stair 'E' - Stair Section Levels P1 - 1 (5 / A6-03)
Scale: 1 : 50

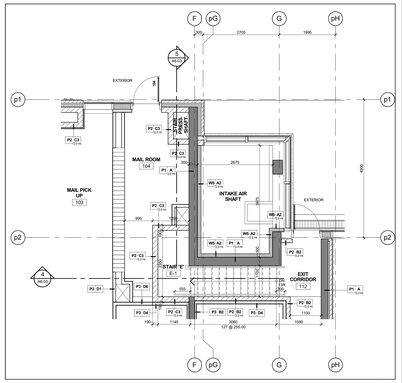

Stair 'E' - Stair Plan - Level 1 (3 / A6-03)
Scale: 1 : 50

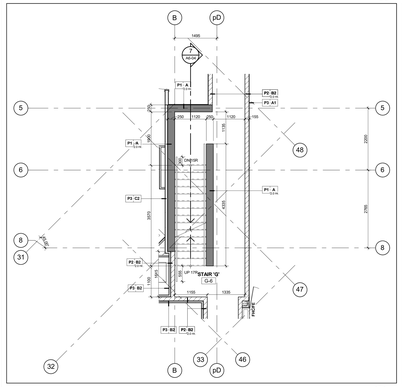

Stair 'G' - Stair Plan - Level 6 (15 / A6-03)
Scale: 1 : 50

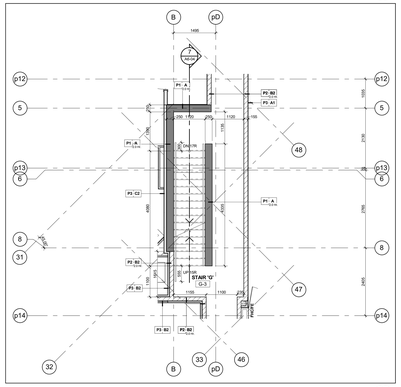

Stair 'G' - Stair Plan - Level 3 (12 / A6-03)
Scale: 1 : 50

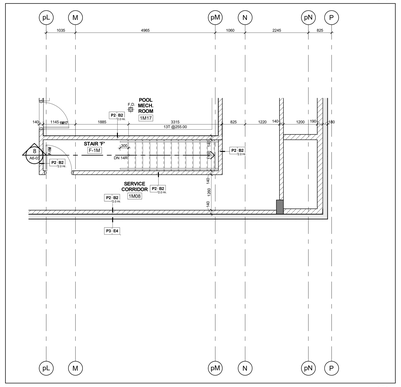

Stair 'F' - Stair Plan - Level 1 Mezzanine (7 / A6-03)
Scale: 1 : 50

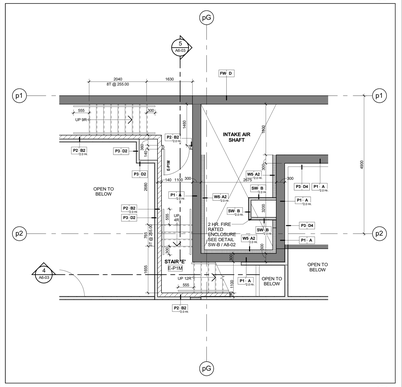

Stair 'E' - Stair Plan - Level P1 Mezzanine (2 / A6-03)
Scale: 1 : 50

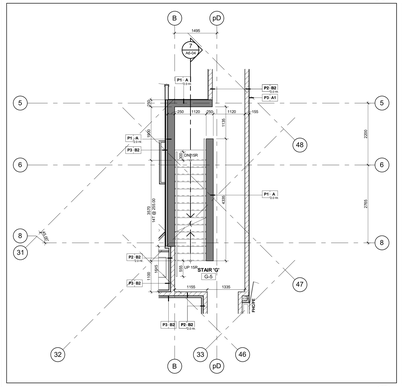

Stair 'G' - Stair Plan - Level 5 (14 / A6-03)
Scale: 1 : 50

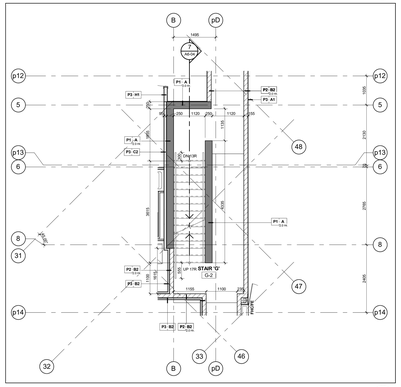

Stair 'G' - Stair Plan - Level 2 (11 / A6-03)
Scale: 1 : 50

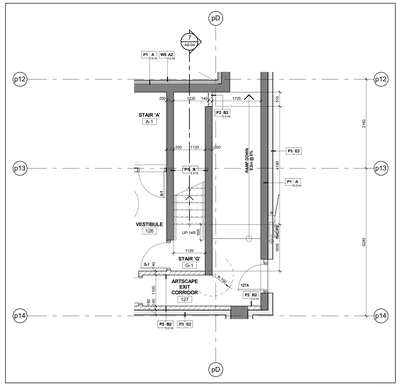

Stair 'GF' - Stair Plan - Level 1 (9 / A6-03)
Scale: 1 : 50

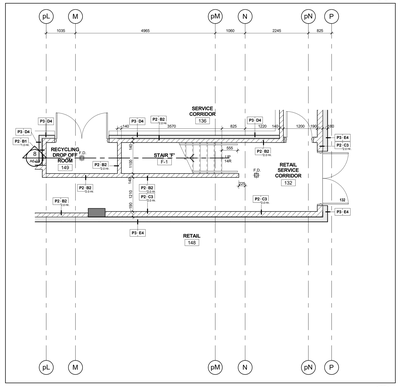

Stair 'F' - Stair Plan - Level 1 (6 / A6-03)
Scale: 1 : 50

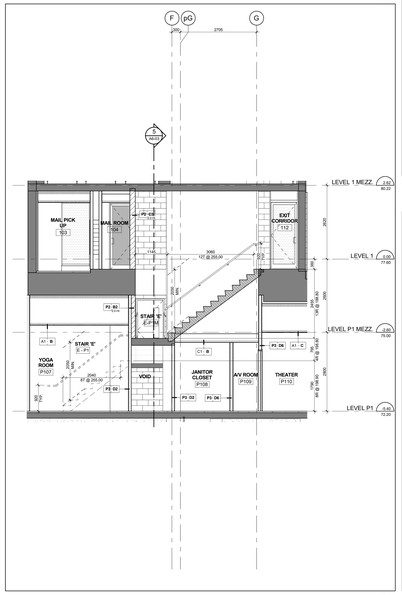

Stair 'E' - Stair Section Levels P1 - 1 Mezzanine (4 / A6-03)
Scale: 1 : 50

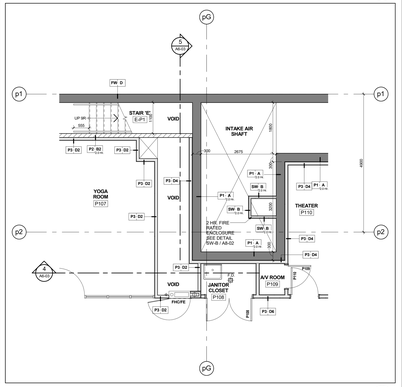

Stair 'E' - Stair Plan - Level P1 (1 / A6-03)
Scale: 1 : 50

Contractor Must Check And Verify All Dimensions On The Job.
Do Not Scale The Drawings.
All Drawings, Specifications And Related Documents Are The Copyright Of The Architect And Must Be Returned Upon Request.
Reproduction Of Drawings, Specifications And Related Documents Is Not Or Wholly In Exclusion Without The Architects Written Permission.
The Drawing Is Not To Be Used For Construction Until Signed By The Architect.
Date: November 4, 2016

SEAL MUST BE SIGNED TO BE VALID
Construction

KIRKOR ARCHITECTS + PLANNERS
20 Martin Ross Avenue, Toronto, Ontario, M3J 2K8
Tel 416 665-6060, Fax 416 665-7234, www.kirkorarchitects.com

No.	Revision	Date
4.	Construction	Nov. 4, 2016
3.	Tender	Oct. 13, 2015
2.	Building Permit	June 12, 2015
1.	Waterfront Toronto Review	May 1, 2015

No.	Issued For	Date

AQUAVISTA
AT BAYSIDE TORONTO

Drawing Title
Stair Plans & Sections
Stair 'E', 'F' & 'G' Plans and Sections

Project
Hines TRIDEL
AQUAVISTA
Block 3 - R3 & R4
263 Queens Quay East
Toronto, ON.

Scale 1 : 50
Drawn by M.R.
Checked by C.A.
Project No. 13148
Date November 4, 2016
Drawing No. A6-03