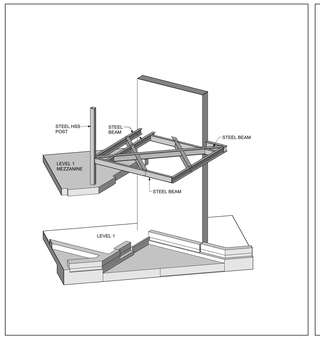

Level 1 Mezz - Steel Canopy @ Gridlines pA & p10 - 3D View 15 A9-17
NTS

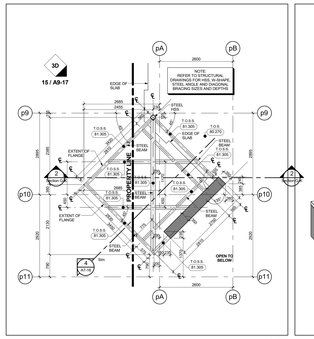

Level 1 Mezz - Steel Canopy @ Gridlines pA & p10 14 A9-17
Scale: 1 : 50

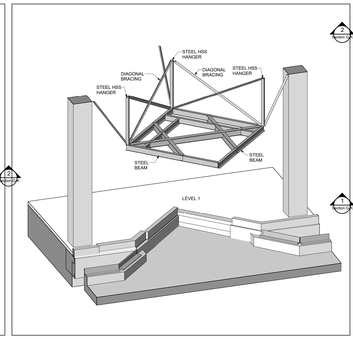

Level 1 Mezz - Steel Canopy @ Gridlines pR & p12 - 3D View 13 A9-17
NTS

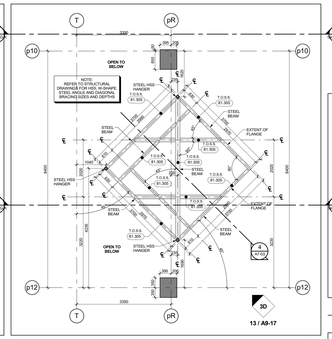

Level 1 Mezz - Steel Canopy @ Gridlines pR & p12 12 A9-17
Scale: 1 : 50

Key Plan - Level 1 Mezzanine 3 A9-17

GENERAL SLAB-EDGE NOTES

1. ASSUME TOP OF FLOOR SLAB ELEVATION AS 200; FOR FLOOR SLAB ELEVATION SEE BUILDING SECTION DRAWINGS.
2. ALL STRUCTURE COLUMNS AND SHEAR WALLS ARE LOCATED 90° WITH GRID LINE, UNLESS NOTED OTHERWISE.
3. REFER TO STRUCTURAL DRAWINGS FOR FURTHER COLUMN, WALL AND BEAM DETAILS AND DIMENSIONS.
4. FOR ELEVATOR SHAFT SIZE AND OPENINGS REFER TO SHOP DRAWINGS FOR DETAILS.
5. CONTRACTORS TO CONFIRM STAIRS LOCATION WITH STEEL STAIR MANUFACTURE FOR STAIR NO. LANDING REFER TO STAIR SECTION ON AE - SERIES DRAWINGS.
6. CONTRACTORS TO CONFIRM STAIR LOCATION WITH STEEL STAIR MANUFACTURE FOR STAIR NO. LANDING REFER TO STAIR SECTION ON AE - SERIES DRAWINGS.
7. REFER TO LANDSCAPE DRAWINGS FOR PLANTER WALL, PLANTER SLAB, PLANTER SLAB DEPRESSION LOCATIONS AND GENERAL DETAILS AND DIMENSIONS.
8. REFER TO MECHANICAL AND ELECTRICAL DRAWINGS FOR: HORIZONTAL SHAFT OPENING SIZES IN WALLS; VERTICAL SHAFT OPENING SIZES IN FLOORS; PIPE SLEEVE SIZES AND OPENING SIZES AND ALL OTHER DETAILS
9. REFER TO ARCHMB DRAWINGS FOR SURVEYED LOCATIONS, DIMENSIONS AND ELEVATIONS OF EXISTING SLAB EDGE WHICH ARE TO BE CONFIRMED BY THE SURVEYOR ON SITE.
10. REFER TO SHERWOOD GEOTECHNICAL ENGINEERS DRAWINGS FOR EXCAVATION SHORING AND TEMPORARY SHORING FOR CONSTRUCTION.
11. DIMENSIONS FOR CRANE TOWER LOCATIONS AND CRANE TOWER SLAB OPENING ARE ONLY PROPOSED AND ARE TO BE COORDINATED WITH ARCHMB AND / OR CRANE TOWER SHOP DRAWINGS AND STRUCTURAL CONSULTANT.

General Slab Edge Notes 2 A9-17

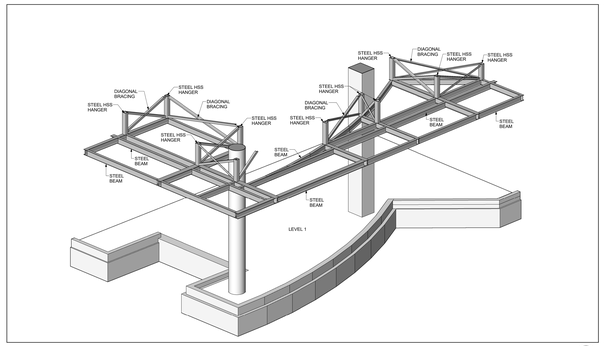

Level 1 Mezz - Steel Canopy @ Gridlines pA & p18 - 3D View 11 A9-17
NTS

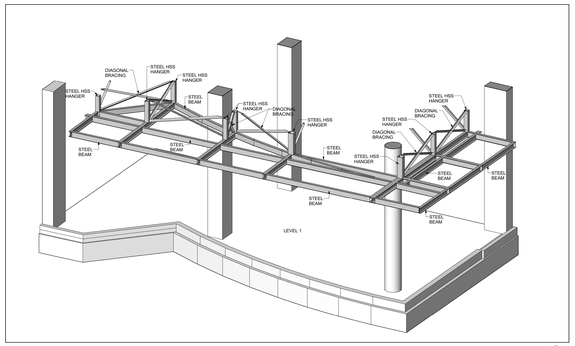

Level 1 Mezz - Steel Canopy @ Gridlines pR & p18 - 3D View 9 A9-17
NTS

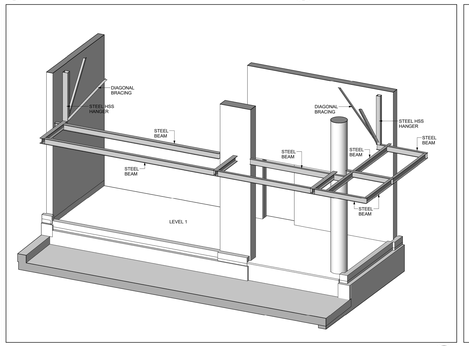

Level 1 Mezz - Steel Canopy @ Gridlines pR & p1 - 3D View 7 A9-17
NTS

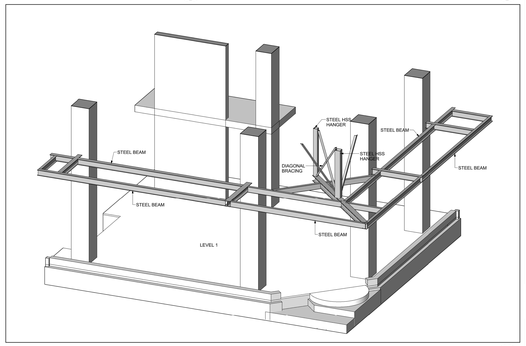

Level 1 Mezz - Steel Canopy @ Gridlines pA & p1 - 3D View 5 A9-17
NTS

GENERAL SLAB-EDGE LEGEND:

- DARK HATCH INDICATES CONCRETE WALL OR COLUMN
- LIGHT HATCH INDICATES STRUCTURAL CURBS, LOW WALLS, OR HAUNCHES
- LIGHTER HATCH INDICATES STRUCTURAL TRANSFER SLABS, BALCONYS, OR TERRACES
- HATCHED AREA INDICATES CONCRETE TOPPING
- HATCHED AREA INDICATES SECONDARY CONCRETE POUR
- HATCHED AREA INDICATES FLOATING SLAB
- EXISTING FINISHED LANDSCAPE GRADING, REFER TO LANDSCAPE DWGS.
- 158.00 (389.00) TOP OF CONCRETE SLAB HIGH POINT
- 158.00 (389.00) TOP OF CONCRETE SLAB LOW POINT
- 158 (389.00) TOP OF CONCRETE BEAM
- 158 (389.00) TOP OF CONCRETE CURB
- 158 (389.00) TOP OF CONCRETE FOUNDATION WALL
- 158 (389.00) TOP OF FOOTING
- 158 (389.00) TOP OF CONCRETE HAUNCH
- 158 (389.00) TOP OF CONCRETE SLAB
- 158.5 (389.00) TOP OF SECONDARY POUR
- 158 (389.00) TOP OF CONCRETE LEDGE
- 158.5 (389.00) TOP OF CONCRETE SLAB DEPRESSION
- 158 (389.00) TOP OF CONCRETE UPTURN BEAM
- 158 (389.00) TOP OF CONCRETE WALL
- 158.5 (389.00) TOP OF CONCRETE FLOATING SLAB
- 158.5 (389.00) TOP OF CONCRETE FLOATING CURB
- 158 (389.00) TOP OF CONCRETE PARAPET
- 158.5 (389.00) TOP OF CONCRETE TOPPING
- 158.5 (389.00) TOP OF CONCRETE TOPPING HIGH POINT
- 158.5 (389.00) TOP OF CONCRETE TOPPING LOW POINT
- 159.5 (389.00) TOP OF CONCRETE LANDSCAPE CURB (ALSO REFER TO LANDSCAPE DRAWINGS)
- 159.35 (389.00) TOP OF CONCRETE LANDSCAPE WALLS (ALSO REFER TO LANDSCAPE DRAWINGS)
- 389.00 (389.00) UNDERSIDE OF CONCRETE BEAM
- 158.5 (389.00) TOP OF STRUCTURAL STEEL
- 158.5 (389.00) TOP OF CONCRETE MUD SLAB

General Slab Edge Legend 1 A9-17

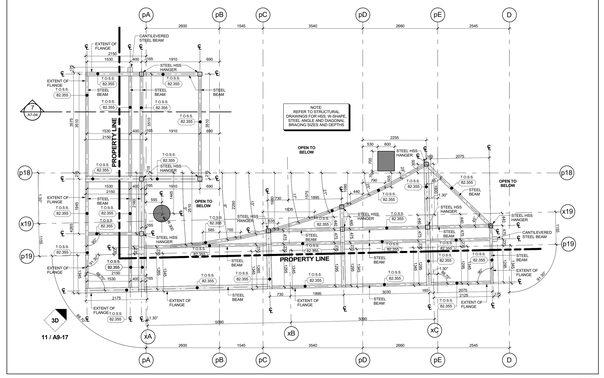

Level 1 Mezz - Steel Canopy @ Gridlines pA & p18 10 A9-17
Scale: 1 : 50

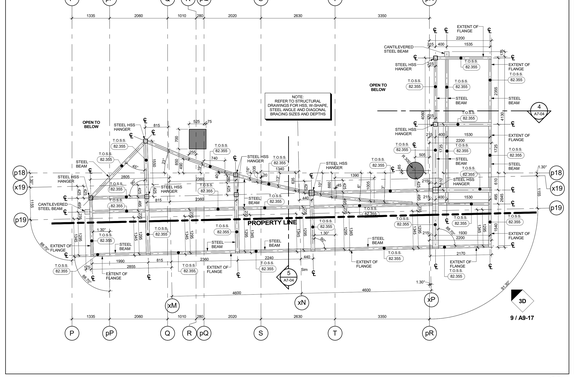

Level 1 Mezz - Steel Canopy @ Gridlines pR & p18 8 A9-17
Scale: 1 : 50

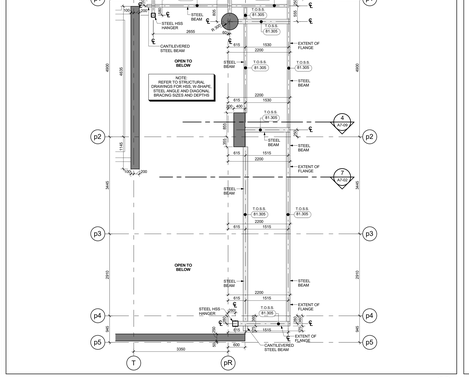

Level 1 Mezz - Steel Canopy @ Gridlines pR & p1 6 A9-17
Scale: 1 : 50

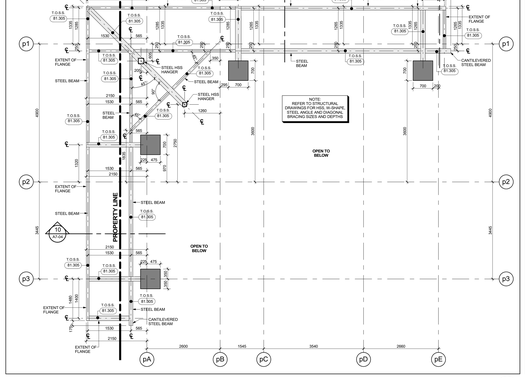

Level 1 Mezz - Steel Canopy @ Gridlines pA & p1 4 A9-17
Scale: 1 : 50

Contractor Must Check And Verify All Dimensions On The Job.
Do Not Scale The Drawings.
All Drawings, Specifications And Related Documents Are The Copyright Of The Architect And Must Be Returned Upon Request.
Reproduction Of Drawings, Specifications And Related Documents In Part Or Whole Is Forbidden Without The Architects Written Permission.
The Drawing Is Not To Be Used For Construction Until Signed By The Architect.

Issue: **November 4, 2016**

SEAL MUST BE SIGNED TO BE VALID
Construction

KIRKOR ARCHITECTS + PLANNERS
20 Martin Ross Avenue, Toronto, Ontario, M3J 2K8
Tel 416 665-6560, Fax 416 665-1234, www.kirkorarchitects.com

No.:	Revision	Date
1	Construction	Nov. 4, 2016
No.:	Issued For:	Date

AQUAVISTA
AT BAYSIDE TORONTO

Drawing Title
Slab Edge Plans
Slab Edge Plan - Level 1 Mezzanine - Steel Canopy Plan

Project
Hines TRIDEL
AQUAVISTA
Block 3 - R3 & R4
263 Queens Quay East
Toronto, ON.

Scale	As indicated
Drawn by	M.N.
Checked by	C.A.
Project No.	13148
Date	November 4, 2016
Drawing No.	A9-17